CONSTRUCTION PLANS FOR:

WALLA WALLA FORKS FISH SCREEN

MAY, 2023

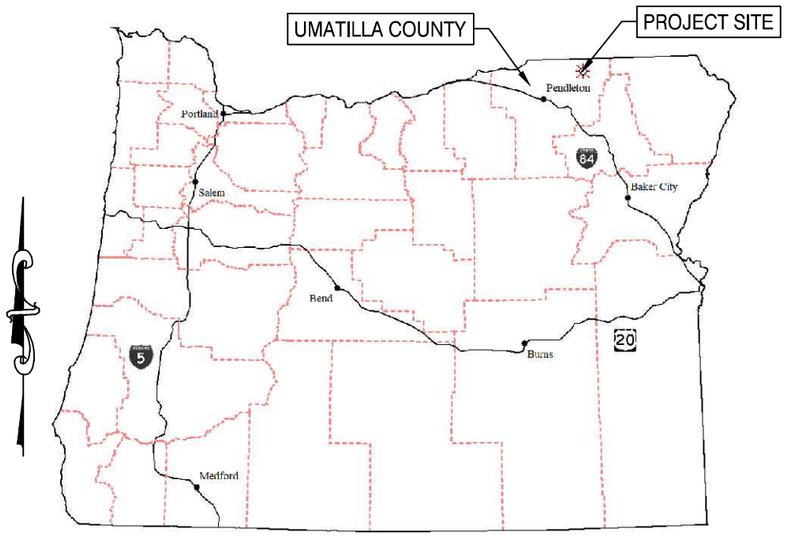

STATE MAP

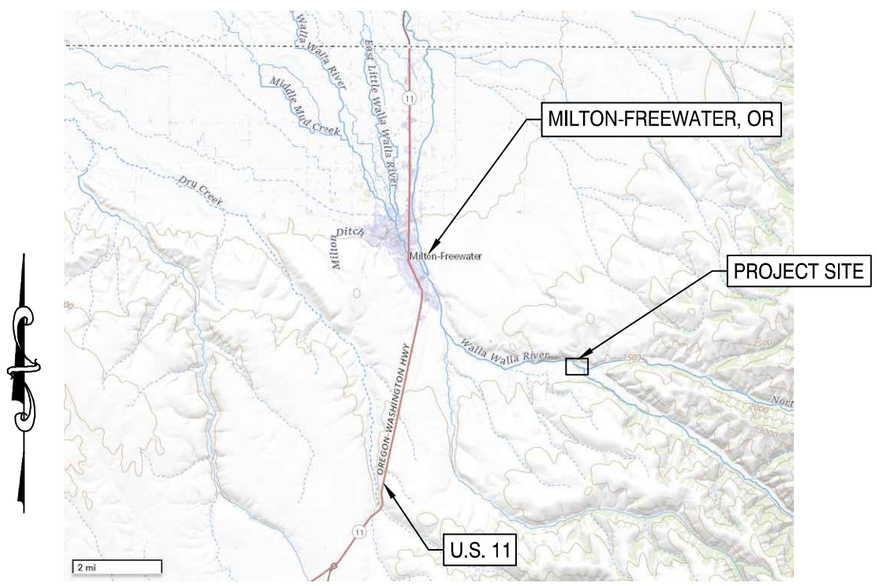

VICINITY MAP
NTS

OWNER

CONFEDERATED TRIBES OF THE UMATILLA INDIAN RESERVATION

CLIENT

GEOENGINEERS INC.

CONSULTANT

RESOURCE SPECIALISTS, INC.
CONTACT: GABE WILLIAMS
20340 EMPIRE AVE. STE. E-8
BEND, OR 97703
PH: 541-771-6911

LOCATION INFORMATION

COUNTY: UMATILLA
T-R-S: 5N 36E S21 & 22

SHEET INDEX

FFS - 1.1	COVER SHEET
FFS - 1.2	LEGEND/BMPS
FFS - 1.3	SPECIFICATIONS
FFS - 1.4	SPECIFICATIONS
FFS - 1.5	EXISTING PLAN OVER PROFILE
FFS - 1.6	EXISTING PLAN OVER CROSS-SECTIONS
FFS - 1.7	PROPOSED FISH SCREEN OVER PROFILE
FFS - 1.8	PROPOSED FISH SCREEN OVER CROSS-SECTIONS
FFS - 1.9	SCREEN DETAILS
FFS - 1.10	REBAR DETAILS
FFS - 1.11	EMBED DETAILS
FFS - 1.12	PADDLEWHEEL DETAILS
FFS - 1.13	PADDLEWHEEL DETAILS
FFS - 1.14	SCREEN DETAILS
FFS - 1.15	SCREEN DETAILS
FFS - 1.16	SCREEN DETAILS
FFS - 1.17	SCREEN DETAILS
FFS - 1.18	SCREEN DETAILS

REGISTERED PROFESSIONAL ENGINEER
72665PE
PRELIMINARY
OREGON
MAY 10, 2016
GABRIEL M WILLIAMS
RENEWAL DATE: 6/30/24

DRAWING STATUS:	DATE:	No.	REVISION:	DATE:
60%	05/16/23			
90%	08/16/23			

RSI Resource Specialists INC.
20340 EMPIRE AVE. STE. E-8
BEND, OR 97703
(541)771-6911
gabe@rsiengr.com

PROJECT: WALLA WALLA FORKS FISH SCREEN
PROJECT LOCATION: UMATILLA COUNTY, OREGON
CLIENT: GEOENGINEERS INC.

DRAWN BY: BDD
SHEET TITLE: COVER SHEET

DRAWING: FFS - 1.1

LEGEND

- EXISTING THALWEG
- MAJOR CONTOUR 5'
- MINOR CONTOUR 1'
- EXISTING OHW
- EXISTING GROUND
- EXISTING ROAD
- PROPOSED GROUND

GENERAL BMPs

ALL IN-STREAM WORK (INCLUDING WORK ISOLATION AND FISH SALVAGE ACTIVITIES) WILL OCCUR DURING THE IN-STREAM WORK.

PRIOR TO PROJECT CONSTRUCTION, THE AREA WILL BE CLEARLY FLAGGED TO DELINEATE SENSITIVE AREAS TO AVOID (INCLUDING WETLANDS, AREAS BELOW OHW, SPRINGS, SPAWNING AREAS, AND OTHER SENSITIVE RESOURCE AREAS), EQUIPMENT ENTRY AND EXIT POINTS, ROAD AND STREAM CROSSING ALIGNMENTS, AS WELL AS STAGING, STORAGE, AND STOCKPILE AREAS.

EXISTING ACCESS ROADS WILL BE USED TO THE FULLEST EXTENT POSSIBLE, TEMPORARY ACCESS ROADS AND PATHS WILL BE MINIMIZED, ESPECIALLY WITHIN RIPARIAN AND FLOODPLAIN AREAS. DISTURBANCE TO EXISTING VEGETATION WILL BE MINIMIZED TO THE FULLEST EXTENT POSSIBLE.

WHEN VEGETATION REMOVAL IS REQUIRED, VEGETATION WILL BE CUT AT GROUND LEVEL IN ORDER TO LEAVE ROOT MASS INTACT.

TEMPORARY ROADS AND ROUTES WILL AVOID STEEP SLOPES IN ORDER TO REDUCE EROSION POTENTIAL.

UPON PROJECT COMPLETION, ALL TEMPORARY ACCESS ROUTES WILL BE REHABILITATED TO FACILITATE THE RESTORATION TO PRE-PROJECT CONDITIONS. THIS WILL INCLUDE DECOMPACTING THE ROAD SURFACE, RESHAPING TO MATCH ORIGINAL CONTOURS, SOIL STABILIZATION WHERE NECESSARY AND REVEGETATION. REVEGETATION SHALL INCLUDE A MIXTURE OF NATIVE WOODY SPECIES AS WELL AS NATIVE GRASSES. REHABILITATION OF TEMPORARY ROUTES WITHIN WET AREAS OR AREAS PRONE TO FLOODING WILL BE COMPLETED WITHIN THE IN-WATER WORK WINDOW.

EROSION CONTROL

IF THERE IS THE POTENTIAL FOR ERODED SEDIMENT TO ENTER THE STREAM, SEDIMENT BARRIERS WILL BE INSTALLED AND MAINTAINED FOR THE DURATION OF THE PROJECT IMPLEMENTATION.

TEMPORARY EROSION CONTROL MEASURES INCLUDING SILT FENCING, JUTE MATTING, AND WOOD FIBER MULCH WILL BE USED AS NECESSARY TO MINIMIZE EROSION AND EROSION POTENTIAL DURING PROJECT IMPLEMENTATION. IT IS THE CONTRACTORS RESPONSIBILITY TO ASSESS THE EROSIVE POTENTIAL OF THE PROJECT SITE AND IMPLEMENT SEDIMENT CONTROL MEASURES AS NECESSARY.

ALL TEMPORARY EROSION CONTROL MEASURES WILL BE REMOVED POST-PROJECT ONCE THE SITE SOILS HAVE BEEN ADEQUATELY STABILIZED.

EQUIPMENT

ALL EQUIPMENT WILL BE SELECTED AND OPERATED IN A MANNER THAT MINIMIZES DISTURBANCE AND ADVERSE EFFECTS TO THE ENVIRONMENT. HARD TURNS WILL BE MINIMIZED ON NATIVE GROUND TO REDUCE IMPACTS. TEMPORARY MATS WILL BE USED WITHIN WET AREAS AND AREAS OF SENSITIVE SOILS AS NECESSARY TO MINIMIZE IMPACTS.

ALL VEHICLES AND MECHANIZED EQUIPMENT WILL BE STORED, REFUELED, GREASED, AND OTHERWISE MAINTAINED WITHIN THE DESIGNATED STAGING AREA.

ALL VEHICLES WILL BE INSPECTED DAILY AND THOROUGHLY CLEANED AS NECESSARY PRIOR TO OPERATION WITHIN 150 FEET OF ANY NATURAL WATER BODY OR WETLAND. ALL SURFACE GREASE WILL BE REMOVED AFTER EQUIPMENT MAINTENANCE.

TEMPORARY STREAM CROSSINGS

WHENEVER POSSIBLE, EXISTING STREAM CROSSINGS WILL BE USED AND THE NUMBER OF TEMPORARY CROSSINGS WILL BE MINIMIZED.

TEMPORARY CROSSINGS WILL BE ORIENTED AT RIGHT ANGLES TO THE CHANNEL AND WILL AVOID AREAS THAT MAY INCREASE THE RISK OF CHANNEL RE-ROUTING OR AVULSION TO MINIMIZE IN-STREAM IMPACTS WHEREVER POSSIBLE.

IMPACTS TO POTENTIAL SPAWNING HABITAT SUCH AS POOLS AND POOL TAILOUTS WILL BE AVOIDED.

INVASIVE SPECIES CONTROL

ALL EQUIPMENT WILL BE POWER WASHED, ALLOWED TO DRY, AND INSPECTED FOR ORGANIC MATERIAL PRIOR TO ENTERING THE SITE. ALL EQUIPMENT (WADERS, BOOTS, ETC.) WILL BE INSPECTED FOR ORGANIC MATERIAL AND INVASIVE SPECIES PRIOR TO UTILIZATION. WADING BOOTS WITH FELT SOLES ARE NOT TO BE USED.

SPILL PREVENTION AND CONTROL

NO HAZARDOUS MATERIALS BEYOND EQUIPMENT FUEL, FLUIDS, AND LUBRICANTS WILL BE USED DURING THIS PROJECT. A SPILL CONTAINMENT KIT WILL BE ONSITE AT ALL TIMES AND WORKERS WILL BE TRAINED IN SPILL CONTAINMENT PROCEDURES.

STAGING AND STORAGE

ALL STAGING AREAS WILL BE LOCATED A MINIMUM OF 150 FEET FROM ANY NATURAL WATERBODY OR WETLAND OR ON AN ADJACENT ESTABLISHED ROAD AREA SUCH THAT NO EROSION INTO OR CONTAMINATION OF THE STREAM OR FLOODPLAIN WILL OCCUR.

STAGING OF NATURAL MATERIALS SUCH AS ROCK AND WOOD MAY OCCUR WITHIN THE 100-YEAR FLOODPLAIN.

ALL NATURAL MATERIALS DISPLACED BY CONSTRUCTION SUCH AS TOPSOIL, LARGE WOOD, AND NATIVE CHANNEL MATERIAL WILL BE STOCKPILED AND FLAGGED FOR USE DURING SITE RESTORATION.

ANY NON-NATIVE MATERIAL REMOVED FROM THE SITE DURING THE PROJECT (CONCRETE, METAL, ETC.) WILL BE REMOVED TO A LOCATION OUTSIDE OF THE 100-YEAR FLOODPLAIN.

REGISTERED PROFESSIONAL ENGINEER
72665PE
PRELIMINARY
OREGON
MAY 10, 2016
GABRIEL M WILLIAMS
RENEWAL DATE: 6/30/24

DRAWING STATUS:	DATE:	No.	REVISION:	DATE:
60%	05/16/23	△		
90%	08/16/23	△		
		△		
		△		
		△		
		△		
		△		

RSI Resource Specialists INC.
20340 EMPIRE AVE. STE. E-8
BEND, OR 97703
(541)771-6911
gabe@rsiengr.com

PROJECT: WALLA WALLA FORKS FISH SCREEN
PROJECT LOCATION: UMATILLA COUNTY, OREGON
CLIENT: GEOENGINEERS INC.

DRAWN BY: BDD
SHEET TITLE: LEGEND/BMPS
DRAWING: FFS - 1.2

EARTHWORK

1. GENERAL

-WORK INCLUDED - ALL EXCAVATION AND BACKFILL WITHIN THE PERIMETER OF THE STRUCTURE, THE DITCH(ES), EXCAVATION(S), THE BYPASS PIPE EXCAVATION, THE DISCHARGE PIPE EXCAVATION, THE JUNCTION BOX EXCAVATION. INCLUDING BUT NOT LIMITED TO STRIPPING, EXCAVATION AND BACKFILL FOR FOOTINGS, WALLS AND SLABS. FOUNDATION DRAINS AND BASE ROCK PLACEMENT FOR SLABS ON GRADE. THIS ITEM ALSO INCLUDES REMOVAL OF ALL UNSUITABLE MATERIALS, ALL DEMOLITION, OTHER SITE WORK, AND RELATED OPERATIONS FROM THE SITE AS WELL AS PURCHASING SELECT MATERIALS REQUIRED BY SPECIFICATION.

-SUBGRADE INSPECTION BY THE ENGINEER OR ENGINEER'S REPRESENTATIVE PRIOR TO BEGINNING ANY FILL OR FORM PLACEMENT IS REQUIRED.

-ANY FILL MATERIAL USED IN THE PROJECT SHALL BE FREE OF CONSPICUOUS PLASTICITY, FROZEN MATERIAL, PEAT, OR WASTE AS LARGE ROOTS, OVERSIZE ROCK, LUMBER, LOGS AND OTHER FOREIGN MATERIAL AND SHALL BE FURNISHED FROM AN APPROVED SOURCE

2. PRODUCTS

-STRUCTURAL FILL - FURNISH STRUCTURAL FILL MEETING THE REQUIREMENTS LISTED BELOW:

1. WELL GRADED GRANULAR MATERIALS. PIT RUN GRAVEL, CRUSHED ROCK OR QUARRY ROCK.
2. NO PEAT, ROOTS, SOD OR OTHER DELETERIOUS MATERIALS.
3. MAXIMUM SIZE = 4"0
4. LESS THAN 12% PASSING #200 SIEVE.
5. PRIOR APPROVAL REQUIRED BEFORE PLACING FILL MATERIALS

-CRUSHED AGGREGATE BASE FOR SLABS - 1" MINUS CRUSHED GRAVEL OR CRUSHED ROCK FREE OF ORGANIC MATERIAL.

-ROCK USED FOR RIPRAP SHOULD BE HARD, DENSE, AND DURABLE WITH A MINIMUM SPECIFIC GRAVITY, ASTM C97: 2.5. SIZE AND SHAPE MUST FOLLOW THE GRADATION INDICATED ON THE PLANS.

3. EXCAVATION

-THE CONTRACTOR IS RESPONSIBLE FOR LOCATING ALL UTILITIES PRIOR TO BEGINNING EXCAVATION.

-THE CONTRACTOR IS RESPONSIBLE FOR LOCATING ALL UTILITIES PRIOR TO BEGINNING EXCAVATION.

-STRIP THE ENTIRE AREA WITHIN THE STRUCTURE PERIMETER TO A MINIMUM OF 6 INCHES, TO INCLUDE ALL GRASS, WEED ROOTS, TRASH AND VEGETATION. REMOVE ALL MATERIALS GENERATED BY THE STRIPPING OPERATION FROM THE SITE. STOCKPILE ANY MATERIAL DETERMINED BY THE ENGINEER'S REPRESENTATIVE AS SUITABLE FOR FUTURE USE.

-THE CONTRACTOR SHALL EXCAVATE TO THE LINES AND GRADES SHOWN ON THE DRAWINGS. EXTREME CARE SHALL BE TAKEN TO ISOLATE EXCAVATION OF MATERIALS FROM THE STREAM WATERS WITH COFFERDAM, SANDBAGS, OR OTHERS METHODS TO PREVENT MUD OR DEBRIS FROM ENTERING THE STREAM WATERS.

-THE CONTRACTOR SHALL BE RESPONSIBLE FOR ALL CARE OF WATER, DEWATERING AND DRAINAGE OF WORK AREAS DURING CONSTRUCTION AND SHALL MAINTAIN ALL EXCAVATIONS AND OTHER PARTS OF THE WORK FREE FROM WATER AS REQUIRED FOR THE SATISFACTORY CONSTRUCTION OF EACH PART OF THE WORK. EXCAVATION SHALL BE PERFORMED IN THE DRY, UNLESS OTHERWISE SPECIFIED.

-THE CONTRACTOR SHALL PROPERLY STOCKPILE SLOPES WHERE REQUIRED TO PREVENT EROSION OR SLOPE INSTABILITY. EROSION FENCING SHALL BE PLACED AT THE TOE OF THE STOCKPILE SLOPE.

4. BACKFILL

-ALL EARTHEN MATERIALS, EXCEPT RIPRAP, PLACED BELOW INDICATED OR DIRECTED FINISH GRADES ARE SUBJECT TO THE REQUIREMENTS OF THIS SUBSECTION EXCEPT AS SPECIFICALLY INDICATED OTHERWISE.

-THE CONTRACTOR SHALL FILL TO LINES AND GRADES SHOWN ON THE DRAWINGS AND AS SPECIFIED HEREIN USING MATERIALS DESIGNATED. WHERE EXISTING SURFACE LEVELS ARE BELOW PLANNED GRADE OR SUBGRADE ELEVATIONS OR EXCESS EXCAVATION IS PERFORMED, BACKFILL SHALL BE PROVIDED TO INDICATED GRADES OR SUBGRADES.

-BACKFILL OR EMBANKMENT SHALL BE PLACED ON FIRM, UNDISTURBED AND DEWATERED SUBGRADE. NO BACKFILL OR EMBANKMENT SHALL BE PLACED OVER VEGETATION, SURFACE ORGANICS, TREE STUMPS, TOPSOIL, ROOTS OR DEBRIS OF ANY KIND, OR SATURATED OR EXCESSIVELY DISTURBED, FROZEN, OR UNCOMPACTED SUBGRADE. THE CONTRACTOR SHALL PROPERLY DEWATER THE SUBGRADE AND MAINTAIN IT IN A DEWATERED CONDITION FOR CONSTRUCTION OPERATIONS. ALL STUMP HOLES, CAVITIES AND OTHER DEPRESSIONS SHALL BE BACK FILLED. THE CONTRACTOR'S SELECTION OF EQUIPMENT SHALL BE APPROPRIATE TO THE SUBGRADE CONDITIONS.

-NO BACKFILL OR EMBANKMENT SHALL BE PLACED UNLESS THE INSPECTOR IS PRESENT EXCEPT AS APPROVED BY THE ENGINEER.

-STOCKPILES SHALL BE LOCATED A SUFFICIENT DISTANCE FROM THE BANKS OF THE EXCAVATION OR TRENCH TO AVOID OVERLOADING AND TO PREVENT SLIDES OR CAVE-INS.

-BACK FILL AND EMBANKMENT MATERIALS SHALL BE PLACED AND COMPACTED (EXCEPT WHERE INDICATED OTHERWISE) IN CONTINOUS HORIZONTAL LAYERS. SUCCEEDING LAYERS SHALL NOT BE PLACED UNTIL THE PRECEDING LAYER HAS BEEN SATISFACTORILY COMPACTED AND TESTED. THE SUBGRADE SHALL BE COMPACTED PRIOR TO PLACEMENT OF THE FIRST LAYER.

(A). COMPACTION BESIDE STRUCTURES: ALL GENERAL BACK FILL PLACED WITHIN 101-0" OF A STRUCTURE (WALL, FOOTING, SLAB) SHALL BE SPREAD IN UNIFORM LIFTS NOT TO EXCEED 8" IN THICKNESS AND COMPACTED TO 92% OF ITS MAXIMUM MODIFIED PROCTOR DRY DENSITY (ASTM D1557) WITH ±3% MOISTURE.

-FINAL GRADES SHALL MATCH EXISTING GRADES UNLESS OTHERWISE NOTED ON THE DRAWINGS. WHERE FINAL GRADES ARE INDICATED ON THE DRAWINGS, GRADES SHALL SLOPE UNIFORMLY BETWEEN ELEVATIONS SHOWN. ALL FINAL GRADES SHALL BE FREE OF HOLLOWS, WHICH WOULD POND RAINWATER AND SHALL SLOPE TO ALLOW FOR SURFACE DRAINAGE. WHERE PRACTICABLE, NO SUCH SLOPES SHALL BE FLATTER THAN 2%, EXCEPT WHERE SPECIFICALLY SHOWN OTHERWISE. ALL EARTHWORK SHALL HAVE FINISHED SURFACES, WHICH HAVE NEAT, REASONABLY UNIFORM APPEARANCE.

REGISTERED PROFESSIONAL ENGINEER
72665PE
PRELIMINARY
OREGON
MAY 10, 2016
GABRIEL M WILLIAMS

RENEWAL DATE: 6/30/24

CONCRETE

1. FORM MATERIALS

-PLYWOOD FORMS: 5/8" MEDIUM DENSITY OVERLAY FOR ALL EXPOSED CONCRETE. PLYWOOD TO BE NEW FOR THIS PROJECT. BURIED OR PERMANENTLY CONCEALED CONCRETE MAY BE FORMED WITH BB FORMPLY, OR EQUAL, OR LUMBER.

-ROUND COLUMN FORMS: SONOTUBE OR STEEL FORM

-KEY, JOINTS AND CHAMFERS: DOUGLAS FIR MATERIAL MOLDING OR APPROVED, CONFORMING TO SHAPE AND DIMENSIONS SPECIFIED OR DETAILED.

-TIES: METAL TIES, NO METAL WITHIN 1" OF SURFACE AFTER TIE REMOVAL. ALIGN TIE HOLES WHERE FINISH IS EXPOSED.

-FORM OIL: SEI GCC-100 FRW WATER-BASED, OR APPROVED BY ENGINEER. FORM OIL FOR CONCRETE TO BE PAINTED OR LEFT IN NATURAL FINISH CONTACT ENGINEER FOR INFORMATION.

-SCREED JOINT: BURKE KEYED KOLD JOINT OR APPROVED BY ENGINEER

-EXPANSION JOINTS: BURKE COMPANY FIBER EXPANSION JOINT, OR APPROVED BY ENGINEER.

2. FORM WORK

-COMPLY WITH ALL PERTINENT RECOMMENDATIONS CONTAINED IN AMERICAN CONCRETE INSTITUTE PUBLICATIONS SP-4 AND ACI-347, CURRENT EDITIONS.

-VERIFY LINES, LEVELS AND MEASUREMENT BEFORE PROCEEDING WITH FORMWORK.

-ALIGN FORM JOINTS. SYMMETRICALLY ALIGN EXPOSED FORM TIE HOLES. MINIMIZE FORM JOINTS.

-DO NOT APPLY FORM RELEASE AGENT WHERE CONCRETE SURFACES RECEIVE SPECIAL FINISHES OR APPLIED COATINGS WHICH MAY BE AFFECTED BY AGENT.

-COORDINATE WORK OF OTHER TRADES IN FORMING AND SETTING OPENINGS, SLOTS, RECESSES, CHASE, SLEEVES, BOLTS, FILLETS, ANCHORS AND OTHER INSERTS. CAP ENDS OF FUTURE USE SLEEVES WITH DUCT TAPE.

-PROVIDE $\frac{3}{4}$" CHAMFER STRIPS ON EXTERNAL CORNERS OF ALL EXPOSED VERTICAL AND HORIZONTAL CONCRETE WORK UNLESS OTHERWISE NOTED ON PLANS.

-BRACE ALL FORMWORK TO MAINTAIN DESIGNED POSITION, DIMENSIONS AND CONTOURS.

-MAKE FORMS TIGHT TO PREVENT CONCRETE LEAKAGE.

-REMOVE ALL FOREIGN MATTER FROM FORMS BEFORE PLACING CONCRETE.

-MINIMUM CURE TIME PRIOR TO FORM REMOVAL:

A.SLAB ON GRADE EDGE FORMS: 12 HOURS
B.SIDE FORMS FOR WALLS, BEAMS AND COLUMNS: 72 HOURS
C.BEAM SOFFITS AND ELEVATED SLABS: 7 DAYS AND 100% OF DESIGN STRENGTH.

3. CONCRETE REINFORCEMENT

-SUBMIT SHOP DRAWINGS SHOWING SIZES AND DIMENSIONS FOR FABRICATION AND PLACING OF REINFORCING STEEL AND BAR SUPPORTS.

-INDICATE BAR SCHEDULES, STIRRUP SPACING AND DIAGRAMS OF BENT BARS. IDENTIFY BAR FUNCTION ON MATERIAL LIST AND SHOP DRAWINGS (TRANSVERSE, LONGITUDINAL, DOWELS, STIRRUPS, TIES, ETC.)

-DO NOT BEGIN FABRICATION PRIOR TO RECEIVING REVIEWED COPIES OF THE SUBMITTALS FROM THE ENGINEER.

-ACCEPTABLE MANUFACTURERS: REGULARLY ENGAGED IN MANUFACTURE OF STEEL BAR AND WELDED WIRE FABRIC REINFORCING.

-SUBMIT MILL TEST CERTIFICATES IDENTIFYING CHEMICAL AND PHYSICAL ANALYSIS OF EACH LOAD AND REINFORCING STEEL DELIVERED.

-NOTIFY ENGINEER IN AMPLE TIME FOR ON SITE OBSERVATION OF REINFORCING STEEL PLACEMENT BEFORE POURING CONCRETE, MINIMUM 72 HOURS.

-BARS TO MEET ASTM A615 GRADE 60

NOTE: WHEN WELDING REBAR THE ONLY REBAR THAT IS READY TO WELD IS W-GRADE (LOW ALLOY-A706)

-WELDED WIRE FABRIC TO MEET ASTM A185

-VERIFY THAT CONCRETE REINFORCEMENT IS INSTALLED IN STRICT ACCORDANCE WITH ALL PERTINENT CODES AND REGULATIONS, THE APPROVED SHOP DRAWINGS AND THE ORIGINAL DESIGN.

-BENDING AND CUTTING SHALL CONFORM TO ACI 315 AND APPLICABLE PROVISIONS OF ACI 318. ALL HOOKS SHOWN ON THE DRAWINGS ARE TO BE STANDARD HOOKS EXCEPT WHERE DESIGNATED OTHERWISE.

-REINFORCING BARS SHALL BE FURNISHED IN FULL LENGTHS WHERE POSSIBLE.

-WHERE SPLICING IS REQUIRED OR RECOMMENDED, THE LENGTH OF THE SPLICE SHALL BE 48 BAR DIAMETERS.

-SPLICE DETAILS ARE SUBJECT TO ALL APPLICABLE PROVISIONS OF ACI 318.

-SPLICES SHALL BE LOCATED AT POINTS OF LOW TENSILE STRESS WHERE POSSIBLE, OTHERWISE DISTRIBUTED TO AVOID A CONCENTRATION OF SPLICES AT A PARTICULAR LINE OR LEVEL.

-IN ALL CASES SPLICES AT LOCATIONS NOT SHOWN ON THE DRAWINGS ARE SUBJECT TO THE ENGINEER'S APPROVAL.

-NO SPLICES SHALL BE MADE IN CONCRETE REINFORCEMENT WHERE THE SECTION IS NOT SUFFICIENT TO PROVIDE A MINIMUM OF 2 BAR DIAMETERS CLEAR COVER AND A MINIMUM CLEARANCE OF 3 BAR DIAMETERS BETWEEN SPLICED BARS AND ADJACENT BARS.

-BARS SHALL BE RIGIDLY WIRED AT SPLICES.

-PLACEMENT OF ALL REINFORCEMENT SHALL CONFORM TO ACI 318. MINIMUM CLEAR DISTANCE BETWEEN BARS 1" OR 1 BAR DIAMETER WHICHEVER IS GREATER.

-WIRE ALL INTERSECTIONS WITH 18 GUAGE BLACK ANNEALED WIRE. SUPPORT ADEQUATELY BY CHAIRS AND SPACERS; FOOTING REINFORCEMENT MAY BE SUPPORTED ON CONCRETE BLOCKS. MAINTAIN MINIMUM 3 INCH CLEARANCE TO GROUND.

-BEFORE PLACING CONCRETE, CLEAN REINFORCEMENT OF BOND INHIBITING COATINGS.

-PLACE, SUPPORT, AND SECURE REINFORCEMENT AGAINST DISPLACEMENT.

-PROVIDE 2 - #4 x 48" LONG DIAGONALLY AT ALL SLAB-ON-GRADE RE-ENTRANT CORNERS.

-PROVIDE .0018 TIMES CONCRETE CROSS SECTIONAL AREA REINFORCING STEEL EACH WAY FOR ALL CONCRETE UNLESS OTHERWISE NOTED.

-ALL LAP SPLICES TO BE 48. BAR DIAMETERS UNLESS OTHERWISE NOTED.

-WHERE CONCRETE IS TO BE DRILLED LATER FOR ANCHOR BOLTS, EXPANSION SHELLS, EXPANSION BOLTS, ETC., AS REQURIED IN THE DRAWINGS, SPECIAL CARE SHALL BE TAKEN TO COORDINATE EXACT LOCATION OF REINFORCEMENT SUCH THAT IT WILL NOT INTERFERE WITH SUCH DRILLING.

4. CONCRETE ANCHORS

-IF ANY PRODUCT(S) OTHER THAN THE SPECIFIED PRODUCT(S) IS/ARE PROPOSED SUBMITTALS MUST BE RECEIVED AND APPROVED PRIOR TO THEIR USE. THESE SUBMITTALS MUST INCLUDE THE FOLLOWING INFORMATION:

1. AN ANCHOR BY ANCHOR LISTING OF THE PROPOSED ANCHORS AND WHAT SPECIFIED ANCHOR EACH PROPOSED ANCHOR IS REPLACING.
2. ICBO REPORT NUMBERS FOR ALL PROPOSED ANCHORS.
3. EVIDENCE THAT THE RATED CAPACITY OF THE PROPOSED ANCHOR IS EQUAL OR GREATER THAN THE SPECIFIED ANCHOR.
4. ANY DIFFERENCES IN HOLE DEPTH, SPACING, EDGE DISTANCE, END DISTANCE OR INSTALLATION METHOD WHICH ARE REQUIRED BY THE PROPOSED PRODUCT.
5. SPECIAL INSPECTION REQUIREMENTS IF DIFFERENT FROM SPECIFIED PRODUCT.

-SPECIAL INSPECTIONS IN ACCORDANCE WITH IBC CHAPTER 17 ARE REQUIRED FOR

1. ALL EPDXY ANCHORS
2. EXPANSION ANCHORS WHERE SHOWN ON PLANS
3. POWDER ACTUATED FASTENERS WHERE SHOWN ON PLANS

-EXPANSION ANCHORS

1. HILTI KWIK -BOLT II
2. SIMPSON STRONG-TIE SLEEVE ALL
3. RAMSET/RED HEAD TRUBOLT

-ADHESIVE ANCHORS

1. HILTI HIT EPDXY ADHESIVE
2. SIMPSON STRONG-TIE ET EPDXY ADHESIVE
3. SIMPSON STRONG-TIE SET EPDXY ADHESIVE 4, RAMSET/RED HEAD C6 EPDXY ADHESIVE

-ALTERNATE ANCHORS MAY BE SUBSTITUTED SUBJECT TO THE FOLLOWING CONDITIONS:

1. PROPOSED PRODUCT MUST BE SAME TYPE OF ANCHOR AS THE SPECIFIED PRODUCT (I.E. EXPANSION ANCHORS MAY NOT BE SUBSTITUTED WHERE ADHESIVE ANCHORS ARE SHOWN.)
2. DIAMETER FOR EXPANSION ANCHORS AND ADHESIVE ANCHORS MUST BE THE SAME AS THE DIAMETER SHOWN ON THE PLANS.
3. PROPOSED PRODUCT MUST HAVE A CURRENT ICBO REPORT LISTING WHICH COVERS THE SPECIFIC APPLICATION FOR WHICH THE PRODUCT IS BEING USED.
4. CAPACITIES, AS SHOWN IN THE ICBO REPORT, MUST BE EQUAL OR GREATER THAN THE VALUES FOR THE SPECIFIED PRODUCT.
5. SUBMITTALS, AS DESCRIBED IN SECTION 1.3 ABOVE MUST BE APPROVED PRIOR TO THE USE OF ALTERNATE MATERIALS ON THE JOB.

-DO NOT INSTALL ANY DRILLED IN CONCRETE ANCHORS UNTIL CONCRETE HAS CURED FOR AT LEAST 10 DAYS.

-MAINTAIN PROPER EDGE DISTANCES AS REQUIRED BY THE MANUFACTURER AND AS SHOWN ON THE PLANS.

5. PRODUCT REQUIREMENTS

-MIX DESIGNS MUST INCLUDE THE FOLLOWING:

1. BATCH WEIGHTS PER CUBIC YARD FOR CEMENT, AGGREGATES AND WATER
2. MANUFACTURER, PRODUCT AND AMOUNT PER CUBIC YARD FOR EACH ADMIXTURE
3. MAXIMUM WATER/CEMENT RATIO
4. MANUFACTURER, PRODUCT AND WEIGHT PER CUBIC YARD FOR FIBROUS REINFORCEMENT, WHERE USED
5. SUPPLIER'S MIX NUMBER
6. RECORD OF 30 PAST CYLINDER BREAKS FOR THE MIX BEING USED INDICATING PAST SUCCESSFUL STRENGTH PERFORMANCE IN ACCORDANCE WITH IBC 1905. REQUIRED AVERAGE STRENGTH MUST EXCEED THE DESIGN STRENGTH BY THE AMOUNTS GIVEN IN IBC 1905.

-SUBMIT DELIVERY TICKET IN ACCORDANCE WITH ASTM C94 SECTION 16. ALL INFORMATION LISTED IN C94 SUBSECTION 16.1, 16.2.7, AND 16.2.8, AND QUANTITY OF WATER ADDED BY THE TRUCK OPERATOR FROM THE MIXING TANK, SHALL BE FURNISHED ON THE DELIVERY TICKET.

-CONCRETE PROPORTIONS: CONCRETE SHALL BE STONE CONCRETE COMPOSED OF CEMENT, FINE AGGREGATE, COARSE AGGREGATE AND WATER.

-PREPARE THE DESIGNS OF MIXES FOR EACH CLASS OF CONCRETE SPECIFIED TO BE USED. DESIGN CONCRETE MIXES IN ACCORDANCE WITH IBC STANDARD 19-3 TO PRODUCE THE STRENGTH FOR EACH TYPE OF CONCRETE WITH THE SLUMPS AND MAXIMUM SIZES OF COURSE AGGREGATE SPECIFIED. COMPRESSIVE STRENGTH, MAXIMUM WATER CONTENT AND MAXIMUM SLUMP SHALL BE AS FOLLOWS:

1. CONCRETE, UNLESS OTHERWISE SPECIFIED:
   (A). COMPRESSIVE STRENGTH AT 28 DAYS: 4,500 PSI
   (B). MINIMUM CEMENT CONTENT: (6 1/2) SACK PER CUBIC YARD
   (C). MAXIMUM SLUMP: 4 INCH
2. AIR ENTRAINMENT:
   (A). FOR ALL EXPOSED CONCRETE: 4% TO 7%
   (B). FOR ALL OTHER CONCRETE: NOT REQUIRED

-CONCRETE TESTING IS REQUIRED EVEN WHEN SPECIAL INSPECTION IS NOT REQUIRED.

-PERFORM THE FOLLOWING TESTS WHENEVER TESTING IS REQUIRED:

(A). SLUMP TEST PER ASTM C143
(B). CAST FOUR CONCRETE CYLINDERS
(C). AIR ENTRAINMENT TEST, WHERE AIR ENTRAINED CONCRETE IS REQUIRED

-FREQUENCY OF TESTS

(A). NOT LESS THAN ONCE PER DAY
(B). NOT LESS THAN ONCE PER 150 CUBIC YARDS OF CONCRETE IN A GIVEN DAY
(C). NOT LESS THAN ONCE PER 5000 SQUARE FEET OF SLAB OR WALL AREA

-LAB CURE ALL SAMPLES. PROTECT SAMPLES FROM ADVERSE WEATHER CONDITIONS.-

-TEST CYLINDERS AT THE FOLLOWING DATES:

(A). ONE BREAK AT 7 DAYS
(B). TWO BREAKS AT 28 DAYS
(C). HOLD ONE CYLINDER IN CASE OF PROBLEMS WITH 28 DAY BREAK

-SEND COPIES OF REPORT TO THE OWNER'S REPRESENTATIVE, THE CONTRACTOR, AND THE ENGINEER.

6.WEATHER

-COLD WEATHER: CONFORM TO ACI 306. PROCEDURES FOR PLACING AND PROTECTING CONCRETE WORK DURING FREEZING WEATHER BY ENGINEER'S APPROVAL ONLY. ASSUME ALL RISKS FOR CONCRETE WORK DURING FREEZING WEATHER. REMOVE AND REPLACE FROZEN CONCRETE AT CONTRACTOR'S EXPENSE. KEEP ABOVE FREEZING POINT UNTIL THOROUGHLY SET. USE NO ADMIXTURES TO PREVENT FREEZING WITHOUT PRIOR APPROVAL.

-HOT WEATHER: CONFORM TO ACI 305. TEMPORARILY DISCONTINUE PLACEMENT WHEN, IN THE OPINION OF ENGINEER'S REPRESENTATIVE, CLIMATIC CONDITIONS OF SUN, HEAT, WIND, OR HUMIDITY PREVENT PROPER PLACEMENT, CONSOLIDATION OR FINISHING. USE OF APPROVED RETARDANT ADMIXTURE SHALL BE PROVIDED AT NO ADDITIONAL CHARGE TO THE OWNER IF, IN THE OPINION OF THE ENGINEER, CLIMATIC CONDITIONS SO INDICATE.

-WHERE FIBER REINFORCED CONCRETE IS USED ON THE PROJECT A DELIVERY TICKET, SIGNED BY THE WEIGHMASTER, SHALL BE AVAILABLE TO THE ENGINEER'S REPRESENTATIVE UPON REQUEST.

-THE DELIVERY TICKET SHALL INCLUDE, IN ADDITION TO THE ITEMS NOTED IN SECTION OF ASTM C94, THE TYPE AND AMOUNT OF FIBERS ADDED TO THE CONCRETE MIX.

7. MATERIALS

-PORTLAND CEMENT: TYPE I OR II LOW ALKALI PCC THAT CONFORMS TO ASTM C-150

-CONCRETE AGGREGATES: CONFORM TO ASTM C-33. ¾" MAXIMUM SIZE FOR EXPOSED CONCRETE. 1/12" MAXIMUM SIZE FOR FOOTINGS.

-WATER: CLEAN AND FREE OF SUBSTANCES HARMFUL TO CONCRETE

-GROUTING: NON-SHRINK, PRE-MIXED GROUT. MASTER BUILDERS, SONNEBORN, FOSROC, OR EQUAL. CONFORM TO ASTM C-1107

-WATER REDUCING ADMIXTURE

1. MID-RANGE WATER REDUCING ADMIXTURE
2. NO CALCIUM CHLORIDE
3. ASTM C-494, TYPE A ADMIXTURE

-AIR ENTRAINING ADMIXTURES FOR CONCRETE: CONFORM TO ASTM C-260

-LIQUID MEMBRANE-FORMING COMPOUNDS FOR CURING CONCRETE: CONFORM TO ASTM C-309. PROVIDE 5E1 GCC- 300 OR APPROVED.

-LIQUID MEMBRANE-FORMING COMPOUNDS HAVING SPECIAL PROPERTIES FOR CURING AND SEALING CONCRETE: CONFORM TO ASTM C-1315. PROVIDE ONLY VOC COMPLIANT MATERIALS.

-EXPANSION JOINT MATERIAL: PREFORMED, NON-EXTRUDING RESILIENT FILLER SATURATED WITH BITUMINOUS MATERIALS HAVING PRESERVATIVE CHARACTERISTICS. BURKE FIBER EXPANSION JOINT OR APPROVED EQUAL. THICKNESS UNLESS OTHERWISE NOTED ON PLANS.

-CONCRETE BONDING AGENT: FOX INDUSTRIES FX-752 OR APPROVED BY ENGINEER

DRAWING STATUS:	DATE:	No.	REVISION:	DATE:
60%	05/16/23	△		
90%	08/16/23	△		
		△		
		△		
		△		
		△		
		△		

RSI Resource Specialists INC.
20340 EMPIRE AVE. STE. E-8
BEND, OR 97703
(541)771-6911
gabe@rsiengr.com

PROJECT: WALLA WALLA FORKS FISH SCREEN
PROJECT LOCATION: UMATILLA COUNTY, OREGON
CLIENT: GEOENGINEERS INC.

DRAWN BY: BDD

SHEET TITLE: SPECIFICATIONS

DRAWING: FFS - 1.3

CONCRETE CONTINUED

8. FINISH
-VIBRATION OF CONCRETE: CONSOLIDATE WITH MECHANICAL VIBRATORS. DO NOT USE FOR TRANSPORTING CONCRETE. PROVIDE A SPARE VIBRATOR AT JOB SITE DURING ALL CONCRETE POURS.
-BONDING AND GROUTING: BEFORE DEPOSITING NEW CONCRETE ON OR AGAINST CONCRETE WHICH HAS SET, THOROUGHLY CLEAN AND ROUGHEN SURFACES, REMOVING LAITANCE, LOOSE PARTICLES AND FOREIGN MATTER
-FLOOR LEVELS: SCREED TO TRUE LEVELS OF SLOPES, FURNISH TOLERANCE AT SURFACE OF CONCRETE PLUS OR MINUS 1/8" IN 10 FEET NOT TO EXCEED 3/8" PLUS OR MINUS, OVER ENTIRE AREA. FINISH FLOOR PATCHING SHALL BE FLUSH WITH EXISTING CONCRETE.
-MECHANICAL SCREEDS ARE PERMITTED
-POUR RETAINING WALLS IN SECTIONS NOT TO EXCEED 24'. PROVIDE ½" EXPANSION JOINT MATERIALS BETWEEN POURS.
-CONSTRUCTION JOINTS SHALL BE PLACED FOR EVERY 2000SF OF SLAB POUR. CONTROL JOINTS SHALL BE PLACED EVERY 600SF OF SLAB POUR. SEE DETAILS IN PLANS FOR JOINT CONSTRUCTION.
-DURING CURING PERIOD, THE CONCRETE SHALL BE PROTECTED FROM DAMAGING MECHANICAL DISTURBANCES, SUCH AS LOAD STRESSES, HEAVY SHOCK, AND EXCESSIVE VIBRATION.
-DO NOT BACKFILL CONCRETE WALLS UNTIL CONCRETE HAS REACHED 100% OF DESIGN STRENGTH AND MINIMUM 96 HOURS.
-BACKFILL THAT DOES NOT EXCEED TWO FEET HIGHER ON ONE SIDE THAN THE OTHER IS PERMITTED AFTER 72 HOURS.
-PROVIDE FINISHED AS FOLLOWS:
1. VERTICAL EXPOSED CONCRETE: SMOOTH FORM FINISH. FILL ALL HOLES GREATER THAN ¼" IN ANY DIMENSION. REMOVE ALL FINS, PROJECTIONS AND FORM MARKS. PROVIDE CONCRETE SMOOTH TO THE TOUCH WITHIN THE FISHWAY.
2. SLABS: DENSE SMOOTH STEEL TROWEL FINISH.

-AFTER FORM TIE REMOVAL, FILL HOLES WITH STANDARD GROUT MIXED AS DRY AS FEASIBLE, RAM SOLID AND RUB SMOOTH.
-SLOPE ALL EXTERIOR WALKS AND SLABS A MINIMUM 1/8" PER FOOT ACROSS WIDTH TO DRAIN.
-DEFECTS IN POURED-IN-PLACE CONCRETE WORK: CORRECT AGGREGATE POCKETS, HONEYCOMBING OR OTHER DEFECTS BY PATCHING AND SACKING TO SATISFACTION OF ENGINEER OR ENGINEERS REPRESENTATIVE, IMMEDIATELY FOLLOWING FORM REMOVAL. COAT WITH CONCRETE BONDING AGENT BEFORE PATCHING.
-ALL EXPOSED CONCRETE: GRIND OFF ALL FINS AND PROJECTIONS. SURFACES SHOULD BE TRUE, SMOOTH AND EVEN.
-CURE BY MOISTENING ALL CONCRETE SURFACES. KEEP MOIST FOR 7 DAYS. USE FOG SPRAY CONTINUOUSLY WHEN TEMPERATURES EXCEED 80°F.
-CURING COMPOUNDS ARE PERMITTED. SUBMIT TO ENGINEER FOR APPROVAL PRIOR TO USE.
-ALL DEFECTIVE WORK MUST REMOVED AND REPLACED, AT CONTRACTOR'S EXPENSE, WHEN DIRECTED BY THE ENGINEER, ANY WORK JUDGED BY THE ENGINEER TO BE IN NON-COMPLIANCE WITH THESE SPECIFICATIONS.

STRUCTURE STEEL

1. REFERENCES
-ASTM A36 - STANDARD SPECIFICATION FOR CARBON STRUCTURAL STEEL
-ASTM A53 - STANDARD SPECIFICATION FOR PIPE, STEEL, BLACK AND HOT DIPPED, ZINC-COATED WELDED AND SEAMLESS
-ASTM A 123/123M - SPECIFICATION FOR ZINC (HOT-DIP GALVANZIED) COATINGS ON IRON AND STEEL PRODUCTS
-ASTM A153/153M - SPECIFICATION FOR ZINC COATING (HOT-DIP GALVANIZED) ON IRON AND STEEL HARDWARE
-ASTM A307 - STANDARD SPECIFICATION FOR CARBON STEEL BOLTS AND STUDS, 60,000 PSI TENSILE STRENGTH
-ASTM A325 - STANDARD SPECIFICATION FOR HIGH STRENGTH BOLTS FOR STRUCTURAL STEEL JOINTS
-ASTM F436 - STANDARD SPECIFICATION FOR HARDENED STEEL WASHERS
-ASTM A500 - STANDARD SPECIFICATION FOR COLD-FORMED WELDED AND SEAMLESS CARBON STEEL STRUCTURAL TUBING IN ROUNDS AND SHAPES
-ASTM A501 - STANDARD SPECIFICATION FOR HOT-FORMED WELDED AND SEAMLESS CARBON STEEL STRUCTURAL STEEL TUBING
-ASTM A572 - STANDARD SPECIFICATION FOR HIGH STRENGTH, LOW-ALLOY, COLUMBIUM-VANADIUM STEELS OF STRUCTURAL QUALITY
-ASTM F593 - STANDARD SPECIFICATION FOR STAINLESS STEEL BOLTS, HEX CAP SCREWS, AND STUDS
-ASTM F594 - STANDARD SPECIFICATION FOR STAINLESS STEEL NUTS
-ASTM A 992 - STANDARD SPECIFICATION FOR STEEL FOR STRUCTURAL SHAPES FOR USE IN BUILDING FRAMING
-RCSC - RESEARCH COUNCIL ON STRUCTURAL CONNECTIONS - SPECIFICATION FOR STRUCTURAL JOINTS USING ASTM A325 OR A490 BOLTS
-AWS - ANSI/AWS D1.1 - STRUCTURAL WELDING CODE
-AISC - AMERICAN INSTITUTE FOR STEEL CONSTRUCTION - SPECIFICATION FOR THE DESIGN, FABRICATION AND ERECTION OF STRUCTURAL STEEL FOR BUILDINGS
2. SUBMITTALS
-SHOP DRAWINGS: SUBMIT SHOP DRAWINGS FOR APPROVAL 14 DAYS PRIOR TO BEGINNING FABRICATION. INCLUDE THE FOLLOWING INFORMATION ON SHOP DRAWINGS:
1. SIZES, SHAPES, WEIGHT OF EACH PIECE AND DIMENSION OF ALL MATERIALS USED.
2. FABRICATION DETAILS.
3. DETAILS OF ALL WELDED AND BOLTED CONNECTIONS.

-CERTIFICATIONS: SUBMIT MILL TEST REPORTS CERTIFYING THE MATERIALS MEET THE REFERENCED ASTM SPECIFICATIONS:
1. STRUCTURAL SHAPES AND PLATES
2. BOLTS, NUTS AND WASHERS

-SUBMIT WELDER CERTIFICATION PAPERS FOR ALL WELDERS DOING FIELD WELDING. SUBMIT LETTER FROM MANUFACTURER STATING ALL OFFSITE FABRICATION IS DONE BY CERTIFIED WELDERS.
3. PRODUCTS
-SHAPES AND PLATES
A. WIDE FLANGE BEAMS - ASTM A992, GRADE 50
B. CHANNELS, ANGLES AND PLATES - ASTM A36
C. COVER PLATES AT MOMENT CONNECTIONS - ASTM A572, GRADE 50 ENHANCED
D. STEEL TUBING - ASTM A500 GRADE B
E. PIPE: ASTM A53, GRADE B
F. FLOOR PLATE: ASTM A786: COMMERCIAL GRADE

-BOLTS, WASHERS, AND NUTS: UNLESS OTHERWISE NOTED ON THE PLANS:
1. FOR ALL STEEL TO STEEL CONNECTIONS - A325 (TYPE 1) WITH HEAVY HEX NUTS PER ASTM A563 GRADE DH
2. FOR STAINLESS STEEL BOLTS - ASTM F593
3. FOR STAINLESS STEEL NUTS - ASTM F594
4. FOR ALL STEEL TO WOOD CONNECTIONS - A307
5. MANUFACTURER'S SYMBOL AND GRADE MARKINGS MUST APPEAR ON BOLTS
6. FOR HARDENED FLAT WASHERS (HFW) ASTM F436
7. FOR LOCK WASHERS - ASME B18.21.1
8. FOR DIRECT TENSION INDICATORS - ASTM F959

-WELDING
1. WELDING ROD: E70XX PER ANSI/AWS D1.1
2. FOR COMPLETE PENETRATION GROOVE WELDS IN MOMENT FRAMES PROVIDE WELD MATERIAL MEETING THE REQUIREMENTS OF AISC 341.

-ANCHOR RODS
1. ASTM F1554, GRADE 36 UNLESS OTHERWISE NOTED

-THREADED RODS
1. ASTM A307 UNLESS OTHERWISE NOTED

-FINISH
1. HOT-DIP GALVANIZING
(A). GALVANIZE ALL STEEL UNLESS OTHERWISE NOTED ON THE PLANS.
(B). GALVANIZE IN ACCORDANCE WITH ASTM A123/123M
2. EPOXY IMPREGNATED PAINT
(A). ON ALL PARTS AS INDICATED ON PLANS.
(B). COLOR: REQUEST FROM ENGINEER FOR FINAL COLOR.
3. POWDER COATING
(A). ON ALL PARTS INDICATED ON PLANS.
(B). COLOR: REQUEST FROM ENGINEER FOR FINAL COLOR.

-FABRICATE ALL STRUCTURAL STEEL FABRICATIONS IN ACCORDANCE WITH:
1. THE CONTRACT DOCUMENTS

-AISC AND AWS SPECIFICATIONS
1. APPROVED SHOP DRAWINGS

-ALL BOLTS MUST BE TIGHTENED TO THE SNUG–TIGHT CONDITION ONLY. PRE-TENSIONING IS NOT REQUIRED, OR DESIRED, UNLESS SPECIFICALLY NOTED ON THE DRAWINGS.
-ERECT AND INSTALL STRUCTURAL STEEL AT THE LOCATIONS SHOWN ON THE PLANS.
-THE ERECTOR IS SOLELY RESPONSIBLE FOR DETERMINING THE MEANS AND SEQUENCE OF ERECTION UNLESS SPECIFIC DIRECTIONS ARE NOTED ON THE PLANS.
-MAKE NO FIELD MODIFICATIONS TO THE STRUCTURAL STEEL WITHOUT THE WRITTEN PERMISSION OF THE ENGINEER.
-PROVIDE TEMPORARY BRACING AS REQUIRED TO MAINTAIN STRUCTURE IN PROPER ALIGNMENT UNTIL COMPLETION OF SUPPORTING STRUCTURE.
-INSTALL GALVANIZED STRUCTURAL STEEL WITHOUT DAMAGE TO COATING. ANY DAMAGE TO STRUCTURAL STEEL SHALL BE REPAIRED BY STRIPPING COATING AND REDIPPING PIECE.

SCREEN MATERIALS

1. MATERIALS
-SCREEN PANELS: SCREEN PANELS SHALL BE MADE OF ANY OF THE FOLLOWING TYPES. SEE PLANS FOR SPECIFIC MATERIAL
1. STAINLESS STEEL PERFORATED PLATE
(A). 3/32" DIAMETER HOLES STAGGER SPACED AT 5/32" OC
(B). ASTM A240 GRADE 304 STAINLESS STEEL
2. STAINLESS STEEL PROFILE BAR PANELS
(A). 0.069" OPENINGS
(B). ASTM A-GRADE 304 STAINLESS STEEL
(C). PROVIDE HENDRICK SCREEN OR EQUAL
3. COPPER--NICKEL PROFILE BAR PANELS
(A). 0.069" OPENINGS
(B). ASTM A COPPER--NICKEL STEEL
(C). PROVIDE HENDRICK SCREEN OR EQUAL

-ULTRA–HIGH MOLECULAR WEIGHT PLASTIC (UHMW)
1. HARDNESS
(A). HARDNESS VALUE OF D62 OR HIGHER PER ASTM A785
2. COEFFECIENT OF FRICTION AGAINST STEEL
(A). LESS THAN .20

-STEEL FRAME
1. MATERIALS USED IN STEEL FRAME ARE SPECIFIED UNDER THE STRUCTURAL STEEL SECTION.

-STRIP BRUSH
1. STRIP BRUSHES SHALL CONFORM TO THE FOLLOWING REQUIREMENTS:
(A). MATERIAL: NYLON
(B). BRISTLE DIAMETER: 0.045"
(C). SPINE WIDTH: 7/16"

-BAFFLE BEARING
1. BAFFLE BEARING SHALL CONFORM TO THE FOLLOWING REQUIREMENTS:
(A). MATERIAL: UHMW
(B). TYPE: SLEEVE BEARING
(C). INSIDE & OUTSIDE DIAMETER: AS SPECIFIED ON DRAWING
(D). LENGTH: AS SPECIFIED ON DRAWING

-COMPRESSION SPRING
1. COMPRESSION SPRING SHALL CONFORM TO THE FOLLOWING REQUIREMENTS:
(A). MATERIAL: STAINLESS STEEL GRADE 302
(B). INSIDE & OUTSIDE DIAMETER: AS SPECIFIED ON DRAWING
(C). LENGTH: AS SPECIFIED ON DRAWING

-RUBBER BACKING
1. RUBBER BACKING SHALL CONFORM TO THE FOLLOWING REQUIREMENTS:
(A). MATERIAL: FOAM RUBBER
(B). INSIDE & OUTSIDE DIAMETER: AS SPECIFIED ON DRAWING
(C). LENGTH: AS SPECIFIED ON DRAWING

2. FABRICATION
-FABRICATE ALL SCREEN PARTS IN ACCORDANCE WITH THE CONTRACT DOCUMENTS.
-ANY DISCREPANCIES FOUND DURING CONSTRUCTION SHALL BE BROUGHT TO THE ATTENTION OF THE ENGINEER. DISCONTINUE ALL WORK AFFECTED BY THE DISCREPANCY UNTIL SUCH TIME AS THE ENGINEER HAS PROVIDED A SOLUTION. WORK CAN CONTINUE FOR ITEMS OF THE PROJECT NOT AFFECTED BY THE DISCREPANCY.
-VERIFY CRITICAL DIMENSIONS} FOR FITTING THE SCREEN STRUCTURE INTO THE CONCRETE/STEEL SUPPORT BOX PRIOR TO DELIVERY OF THE SCREEN TO THE SITE.
3. PRODUCTS
-SPROCKETS
1. DRIVE SPROCKETS
(A). MATERIAL: CARBON STEEL
(B). PROVIDE MCMASTER-CARR PARTS OR EQUAL
(C). PROVIDES SIZES AS REQUIRED PER DRAWING
2. IDLER SPROCKETS
(A). MATERIAL: CARBON STEEL
(B). PROVIDE MCMASTER-CARR PARTS OR EQUAL
(C). PROVIDE SIZES AS REQUIRED PER DRAWING

-ROLLER CHAIN
1. MATERIAL: STAINLESS STEEL GRADE 304
2. PROVIDE SIZE AS REQUIRED PER DRAWING

-TYPE D UNIVERSAL JOINT
1. MATERIAL: STAINLESS STEEL GRADE 303
2. PROVIDE SIZE AS REQUIRED PER DRAWING

-GEAR BOXES
1. 90° TURN
(A). SPEED RATIO: 1 TO 1
(B). OUTPUT TORQUE CAPACITY: 75 IN*LB
2. INLINE REDUCTION: NONE REQUIRED

-STEEL SUPPORT FRAME
1. STEEL MATERIALS ARE SPECIFIED IN THE STRUCTURAL STEEL SECTION

4. INSTALLATION
-FABRICATE ALL POWER TRANSMISSION PARTS IN ACCORDANCE WITH THE CONTRACT DOCUMENTS.
-ANY DISCREPANCIES FOUND DURING CONSTRUCTION SHALL BE BROUGHT TO THE ATTENTION OF THE ENGINEER. DISCONTINUE ALL WORK AFFECTED BY THE DISCREPANCY UNTIL SUCH TIME AS THE ENGINEER HAS PROVIDED A SOLUTION. WORK CAN CONTINUE FOR ITEMS OF THE PROJECT NOT AFFECTED BY THE DISCREPANCY.
-VERIFY CRITICAL DIMENSION(S) FOR FITTING THE POWER TRANSMISSION PARTS TOGETHER AND PLACEMENT OF THE POWER TRANSMISSION ASSEMBLY ONTO THE CONCRETE/STEEL SUPPORT BOX PRIOR TO DELIVERY OF THE SCREEN TO THE SITE.
-STORE MATERIALS IN A CAREFUL AND WORKMANLIKE MANNER SO THAT DAMAGE TO THE MATERIALS EITHER FROM CORROSION OR LOADS IS AVOIDED.
-STORE STRUCTURAL STEEL SHAPES ON DUNNAGE SO THEY ARE NOT IN CONTACT WITH DIRT OR STANDING WATER.
-SUPPORT STRUCTURAL STEEL SHAPES SO THE ARE NOT BENT UNDER THEIR OWN WEIGHT OR THE WEIGHT OF OTHER MATERIALS.
-STORE BOLTS AND OTHER FASTENERS IN WEATHER TIGHT CONTAINERS OR OTHERWISE PROTECTED FROM DIRT AND MOISTURE.
1. TAKE ONLY AS MANY FASTENER COMPONENTS AS ARE ANTICIPATED TO BE INSTALLED DURING THE WORK SHIFT FROM PROTECTED STORAGE.
2. RETURN ALL FASTENER COMPONENTS THAT ARE NOT INCORPORATED INTO THE WORK TO PROTECTED STORAGE AT THE END OF THE WORK SHIFT.
3. FASTENER COMPONENTS SHALL NOT BE CLEANED OR MODIFIED FROM THE AS-DELIVERED CONDITION.
4. FASTENER COMPONENTS THAT ACCUMULATE RUST OR DIRT SHALL NOT BE INCORPORATED INTO THE WORK UNLESS THEY ARE REQUALIFIED AS SPECIFIED IN SECTION 7 OF ASTM F1852.

-STORE WELDING RODS IN ORIGINAL CONTAINERS OR IN ROD OVENS. RODS MUST BE KEPT DRY. WET RODS ARE NOT TO BE USED.
-STORE PLASTIC PIECES OUT OF DIRECT SUNLIGHT AND HEAT OVER 100 DEGREES F.
-ALL BOLTS MUST BE TIGHTENED TO THE SNUG-TIGHT CONDITION ONLY. PRE-TENSIONING IS NOT REQUIRED, OR DESIRED, UNLESS SPECIFICALLY NOTED ON THE DRAWINGS.
-ERECT AND INSTALL STRUCTURAL SUPPORT STEEL AT THE LOCATIONS SHOWN ON THE PLANS.
-THE ERECTOR IS SOLELY RESPONSIBLE FOR DETERMINING THE MEANS AND SEQUENCE OF ERECTION UNLESS SPECIFIC DIRECTIONS ARE NOTED ON THE PLANS.
-MAKE NO FIELD MODIFICATIONS TO THE STRUCTURAL STEEL WITHOUT THE WRITTEN PERMISSION OF THE ENGINEER.
-PROVIDE TEMPORARY BRACING AS REQUIRED TO MAINTAIN STRUCTURE IN PROPER ALIGNMENT UNTIL COMPLETION OF SUPPORTING STRUCTURE.
-INSTALL POWER TRANSMISSION ASSEMBLY AFTER STRUCTURAL SUPPORT STEEL HAS BEEN ADEQUATELY FASTENED TO WALLS/FLOOR.

REGISTERED PROFESSIONAL ENGINEER
72665PE
PRELIMINARY
OREGON
MAY 10, 2016
GABRIEL M WILLIAMS
RENEWAL DATE: 6/30/24

DRAWING STATUS:	DATE:	No.	REVISION:	DATE:
60%	05/16/23	△		
90%	08/16/23	△		
		△		
		△		
		△		
		△		
		△		

RSI Resource Specialists INC.
20340 EMPIRE AVE. STE. E-8
BEND, OR 97703
(541)771-6911
gabe@rsiengr.com

PROJECT:
WALLA WALLA FORKS
FISH SCREEN
PROJECT LOCATION:
UMATILLA COUNTY, OREGON
CLIENT:
GEOENGINEERS INC.

DRAWN BY: BDD
SHEET TITLE:
SPECIFICATIONS

DRAWING:
FFS - 1.4

SCALE: 1" = 180'

0 90' 180' 360'

REGISTERED PROFESSIONAL ENGINEER
72665PE
PRELIMINARY
OREGON
MAY 10, 2016
GABRIEL M WILLIAMS
RENEWAL DATE: 6/30/24

SF WALLA WALLA RIVER PROFILE

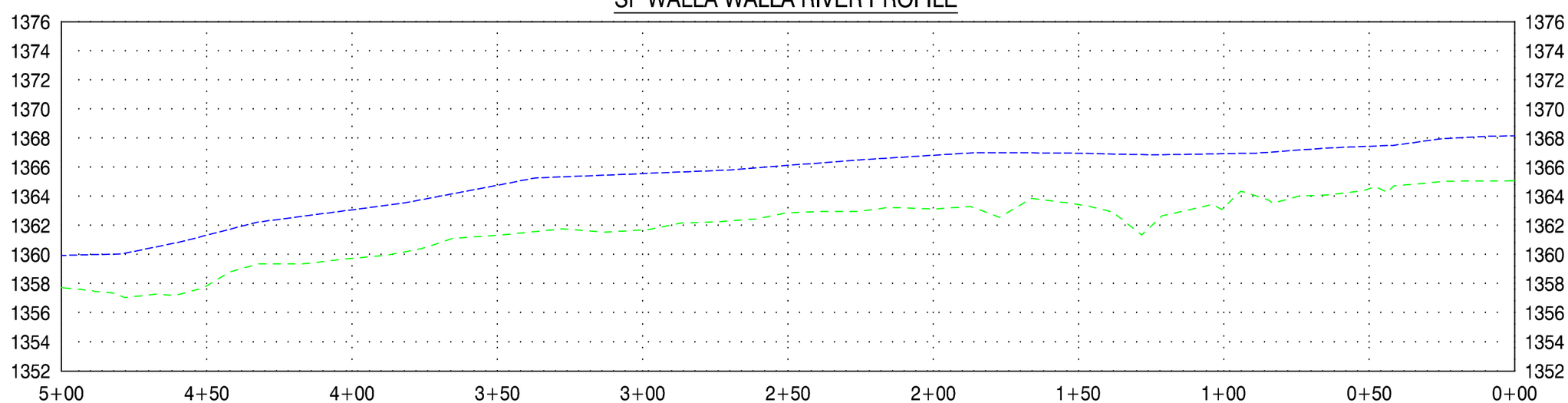

PROFILE:
HOR: 1" = 40'
VER: 1" = 8'

DRAWING STATUS:	DATE:	No.	REVISION:	DATE:
60%	05/16/23	△		
90%	08/16/23	△		
		△		
		△		
		△		
		△		
		△		

RSI Resource Specialists INC.
20340 EMPIRE AVE. STE. E-8
BEND, OR 97703
(541)771-6911
gabe@rsiengr.com

PROJECT: WALLA WALLA FORKS FISH SCREEN
PROJECT LOCATION: UMATILLA COUNTY, OREGON
CLIENT: GEOENGINEERS INC.

DRAWN BY: BDD
SHEET TITLE: EXISTING PLAN OVER PROFILE
DRAWING: FFS - 1.5

SCALE: 1" = 180'

0 90' 180' 360'

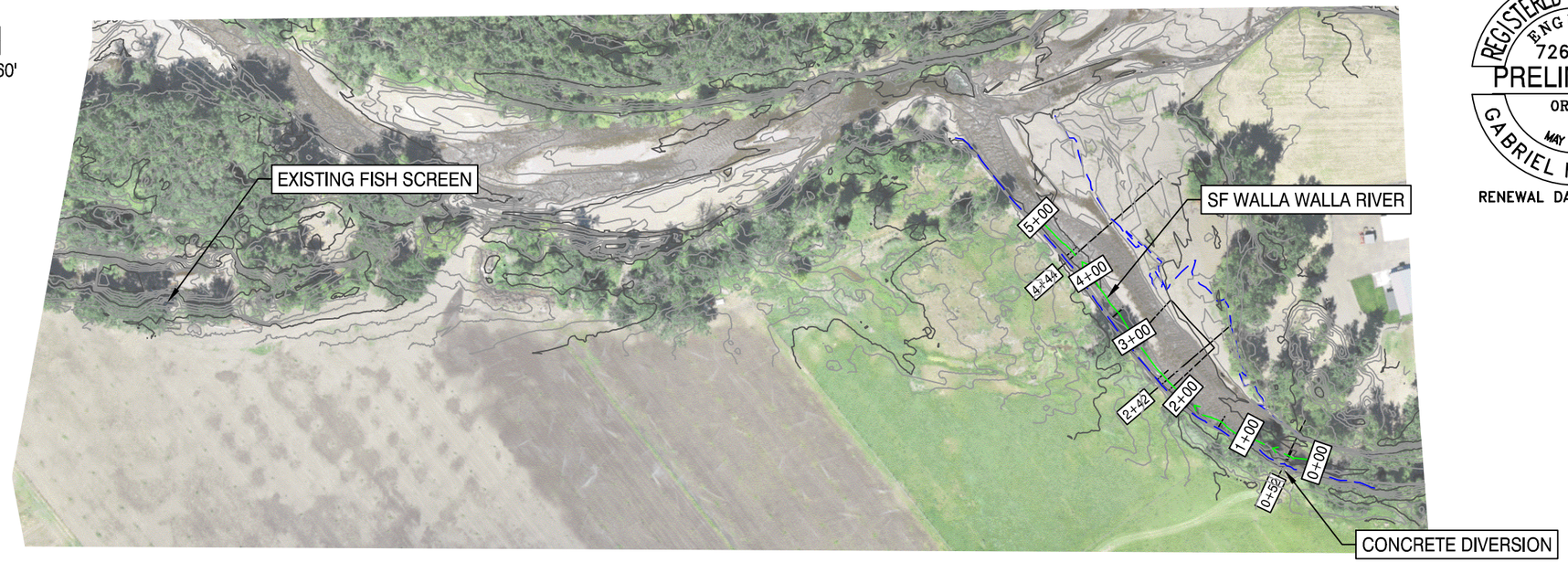

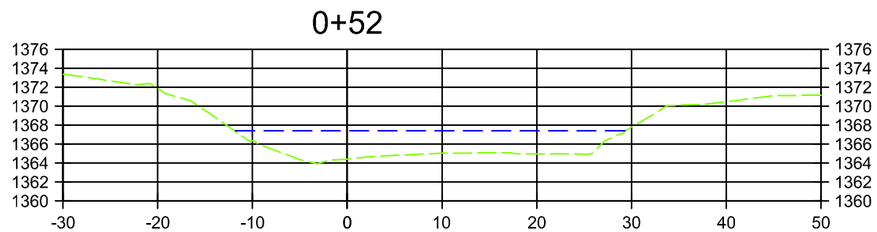

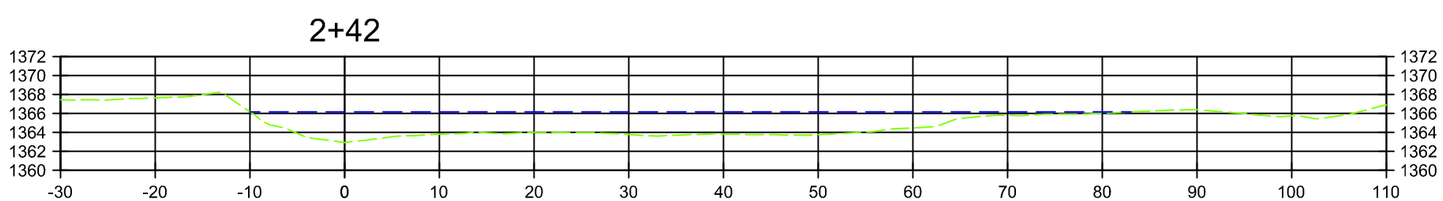

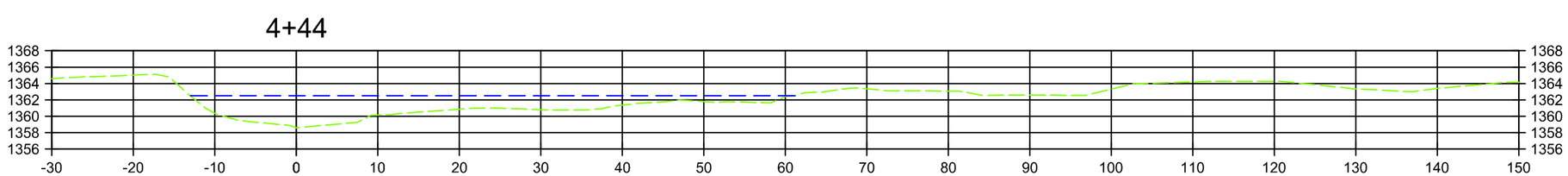

PROFILE:
HOR: 1" = 40'
VER: 1" = 8'

REGISTERED PROFESSIONAL ENGINEER
72665PE
PRELIMINARY
OREGON
MAY 10, 2016
GABRIEL M WILLIAMS
RENEWAL DATE: 6/30/24

DRAWING STATUS:	DATE:	No.	REVISION:	DATE:
60%	05/16/23	△		
90%	08/16/23	△		
		△		
		△		
		△		
		△		
		△		

RSI Resource Specialists INC.
20340 EMPIRE AVE. STE. E-8
BEND, OR 97703
(541)771-6911
gabe@rsiengr.com

PROJECT:
WALLA WALLA FORKS
FISH SCREEN
PROJECT LOCATION:
UMATILLA COUNTY, OREGON
CLIENT:
GEOENGINEERS INC.

DRAWN BY: BDD
SHEET TITLE:
EXISTING PLAN OVER CROSS-SECTIONS

DRAWING:
FFS - 1.6

SCALE: 1" = 100'

0 50' 100' 200'

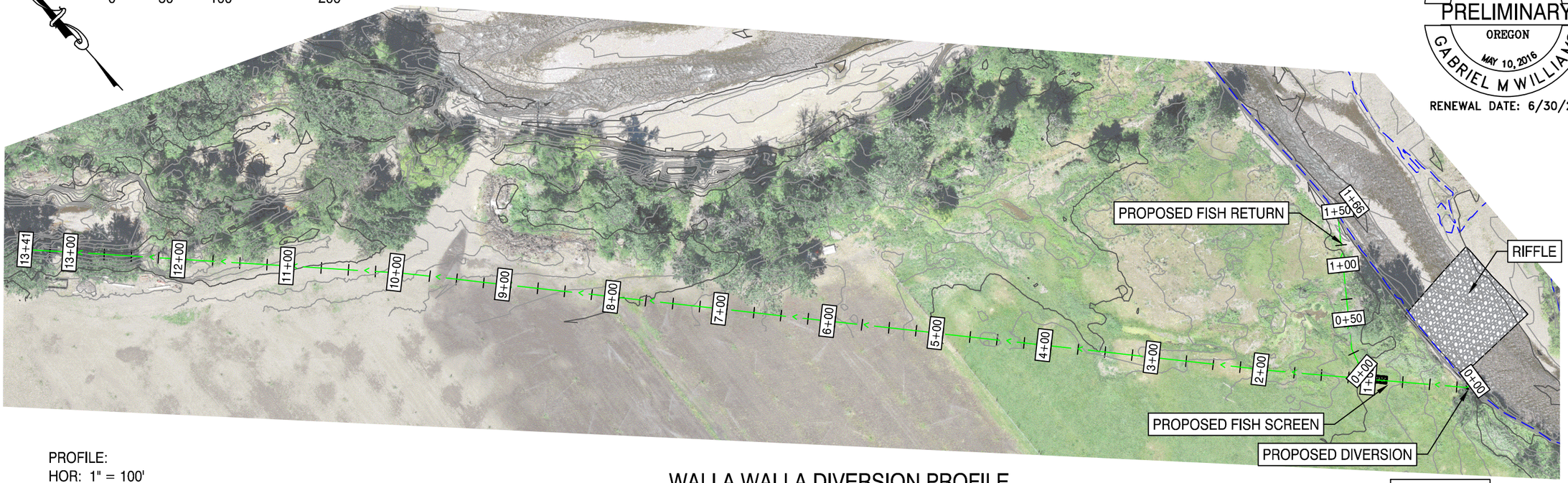

REGISTERED PROFESSIONAL ENGINEER
72665PE
PRELIMINARY
OREGON
MAY 10, 2016
GABRIEL M WILLIAMS
RENEWAL DATE: 6/30/24

PROFILE:
HOR: 1" = 100'
VER: 1" = 25'

WALLA WALLA DIVERSION PROFILE

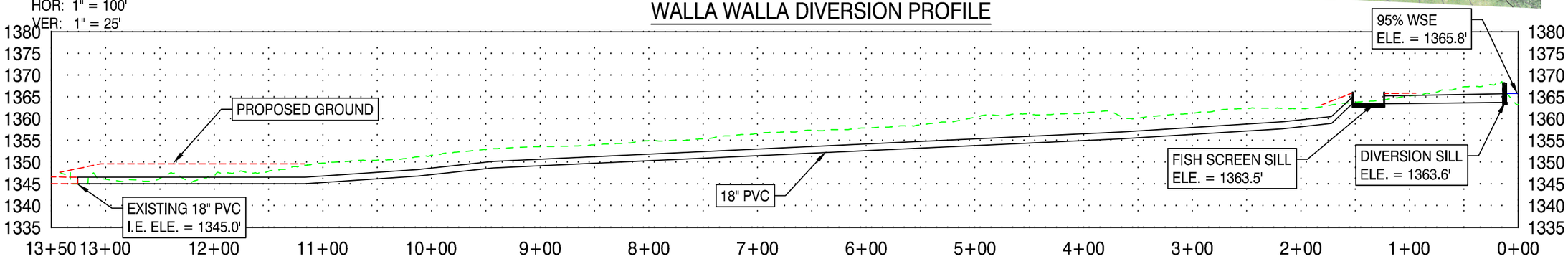

FISH RETURN PROFILE:
HOR: 1" = 12'
VER: 1" = 12'

FISH RETURN PROFILE

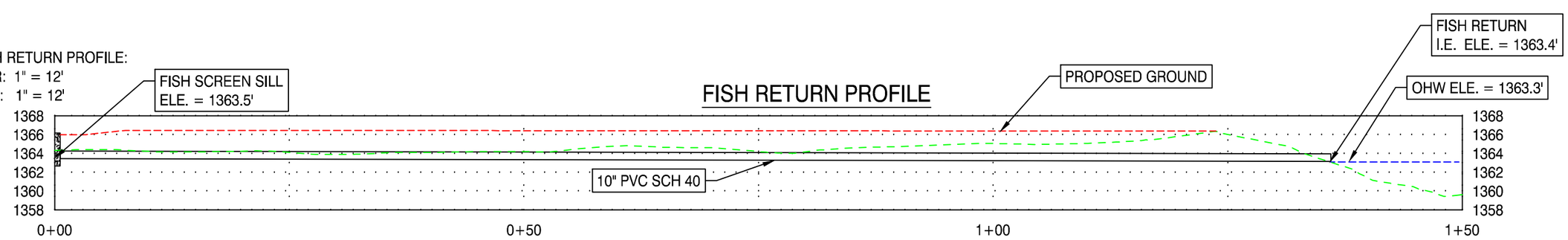

DRAWING STATUS:	DATE:	No.	REVISION:	DATE:
60%	05/16/23	△		
90%	08/16/23	△		
		△		
		△		
		△		
		△		
		△		

RSI Resource Specialists INC.
20340 EMPIRE AVE. STE. E-8
BEND, OR 97703
(541)771-6911
gabe@rsiengr.com

PROJECT: WALLA WALLA FORKS FISH SCREEN
PROJECT LOCATION: UMATILLA COUNTY, OREGON
CLIENT: GEOENGINEERS INC.

DRAWN BY: BDD
SHEET TITLE: PROPOSED FISH SCREEN OVER PROFILE
DRAWING: FFS - 1.7

SCALE: 1" = 40'

0 20' 40' 80'

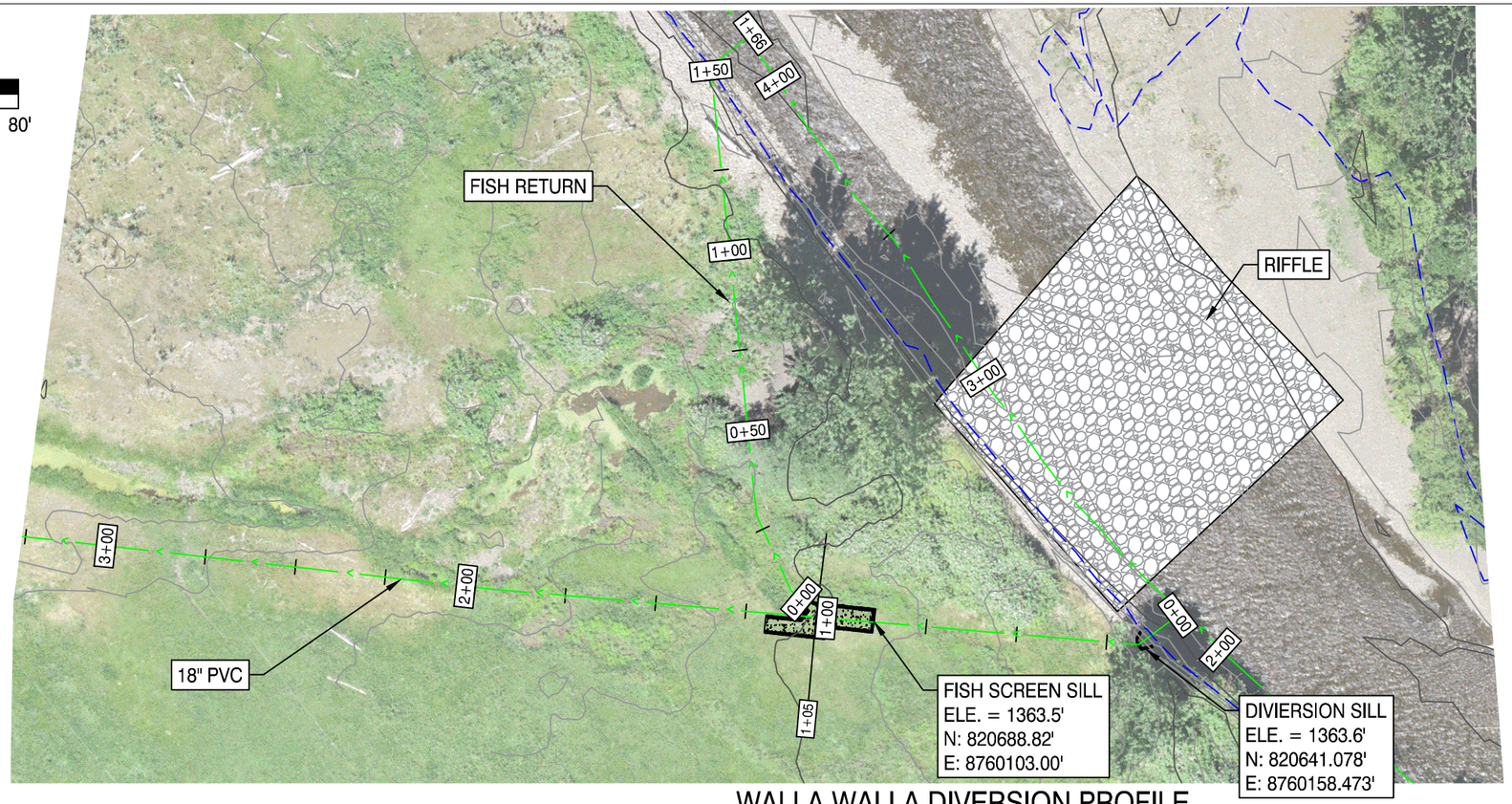

WALLA WALLA DIVERSION PROFILE

PROFILE:
HOR: 1" = 30'
VER: 1" = 6'

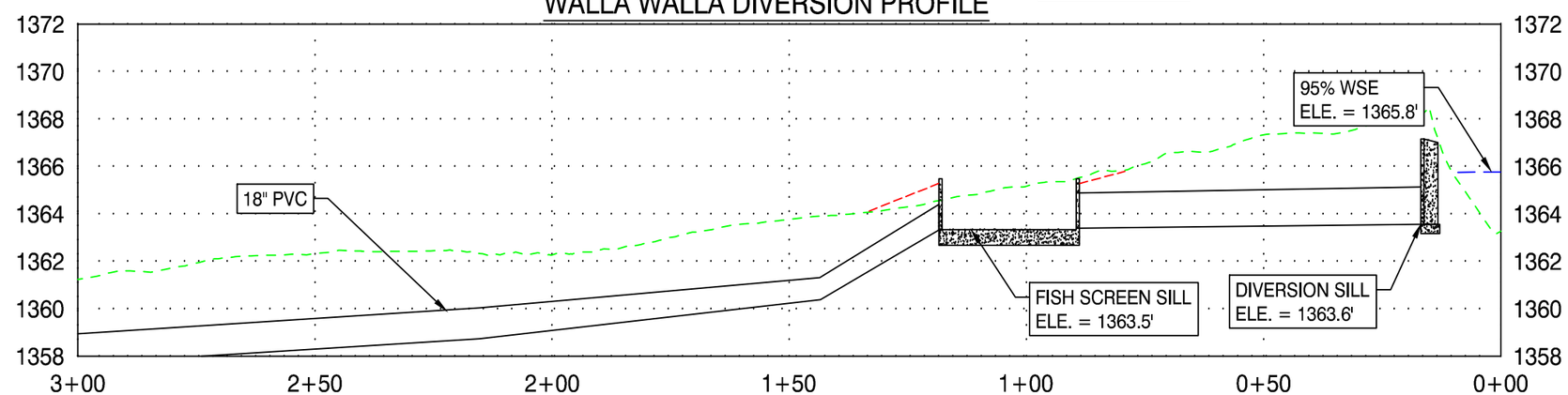

18" PVC INSTALLATION DETAILS

SINGLE PIPE

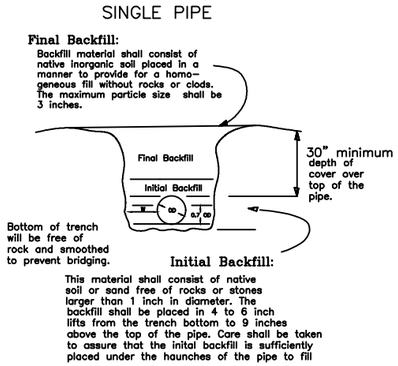

CROSS-SECTION:
HOR: 1" = 10'
VER: 1" = 10'

1+05

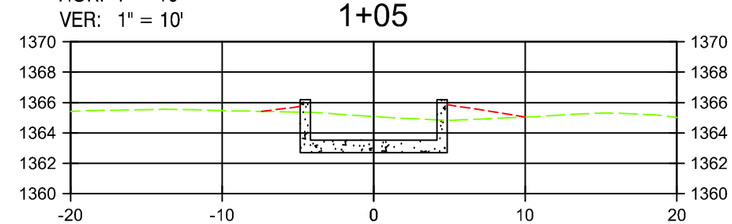

REGISTERED PROFESSIONAL ENGINEER
72665PE
PRELIMINARY
OREGON
MAY 10, 2016
GABRIEL M WILLIAMS
RENEWAL DATE: 6/30/24

DRAWING STATUS:	DATE:	No.	REVISION:	DATE:
60%	05/16/23	△		
90%	08/16/23	△		
		△		
		△		
		△		
		△		
		△		

RSI Resource Specialists INC.
20340 EMPIRE AVE. STE. E-8
BEND, OR 97703
(541)771-6911
gabe@rsiengr.com

PROJECT: WALLA WALLA FORKS FISH SCREEN
PROJECT LOCATION: UMATILLA COUNTY, OREGON
CLIENT: GEOENGINEERS INC.

DRAWN BY: BDD
SHEET TITLE: PROPOSED FISH SCREEN OVER CROSS-SECTIONS
DRAWING: FFS - 1.8

REGISTERED PROFESSIONAL ENGINEER
72665PE
PRELIMINARY
OREGON
MAY 10, 2016
GABRIEL M WILLIAMS
RENEWAL DATE: 6/30/24

SCREEN BOX DIMENSIONS

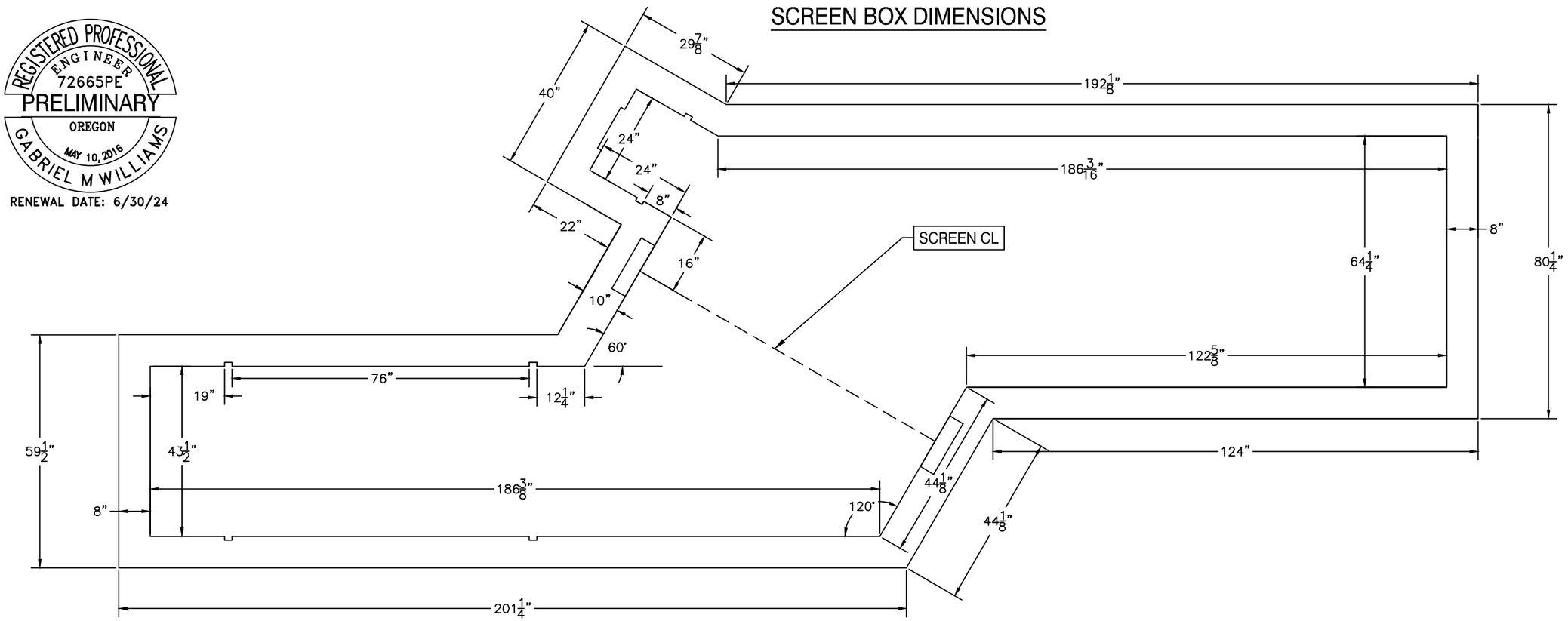

SCREEN BOX EMBED LOCATIONS

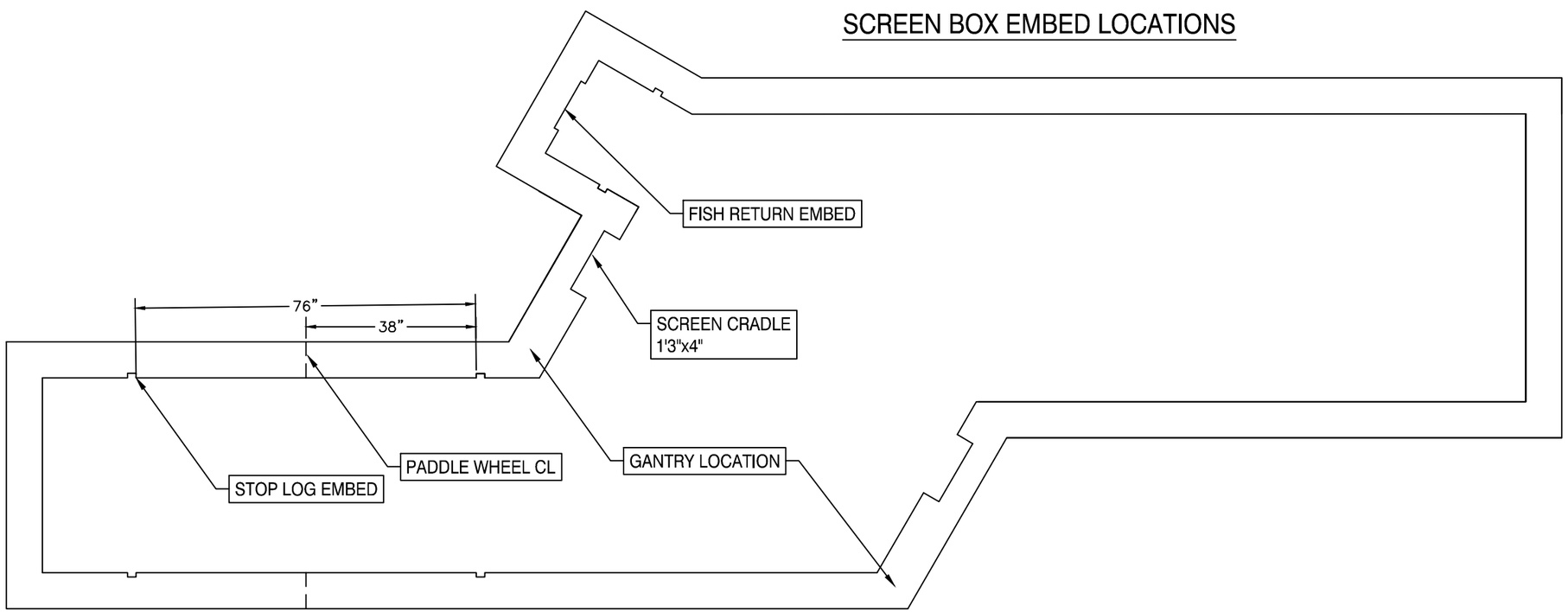

DRAWING STATUS:	DATE:	No.	REVISION:	DATE:
60%	05/16/23	△		
90%	08/16/23	△		
		△		
		△		
		△		
		△		
		△		

RSI Resource Specialists INC.
20340 EMPIRE AVE. STE. E-8
BEND, OR 97703
(541)771-6911
gabe@rsiengr.com

PROJECT: WALLA WALLA FORKS FISH SCREEN
PROJECT LOCATION: UMATILLA COUNTY, OREGON
CLIENT: GEOENGINEERS INC.

DRAWN BY: BDD
SHEET TITLE: SCREEN DETAILS

DRAWING: FFS - 1.9

REGISTERED PROFESSIONAL ENGINEER
72665PE
PRELIMINARY
OREGON
MAY 10, 2016
GABRIEL M WILLIAMS
RENEWAL DATE: 6/30/24

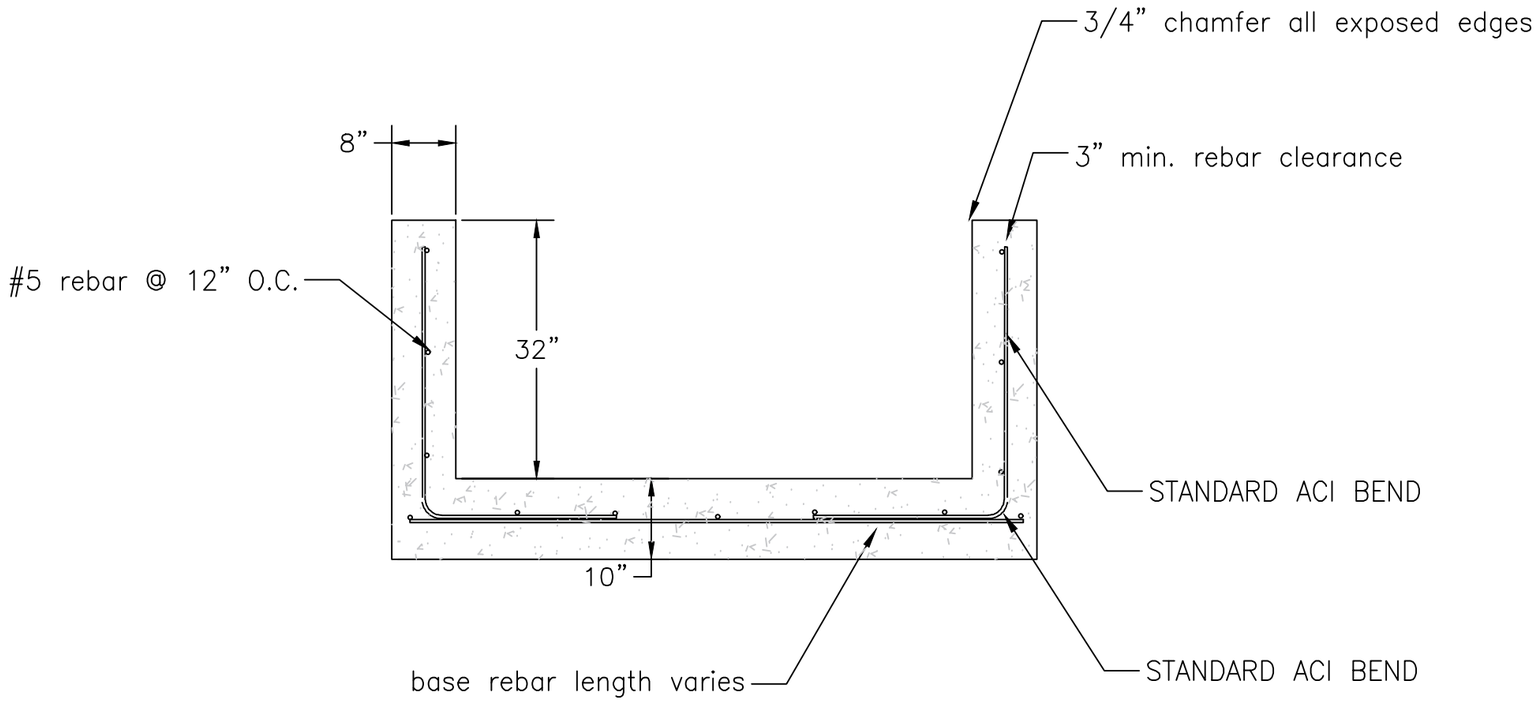

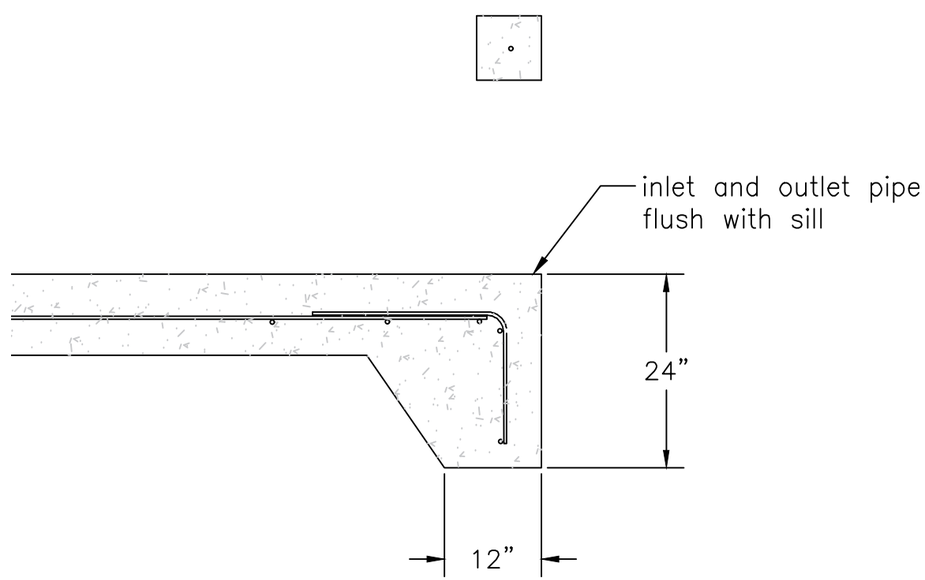

DRAWING STATUS:	DATE:	No.	REVISION:	DATE:
60%	05/16/23	△		
90%	08/16/23	△		
		△		
		△		
		△		
		△		
		△		

RSI Resource Specialists INC.
20340 EMPIRE AVE. STE. E-8
BEND, OR 97703
(541)771-6911
gabe@rsiengr.com

PROJECT:
WALLA WALLA FORKS
FISH SCREEN
PROJECT LOCATION:
UMATILLA COUNTY, OREGON
CLIENT:
GEOENGINEERS INC.

DRAWN BY: BDD
SHEET TITLE:
REBAR DETAILS

DRAWING:
FFS - 1.10

FISH RETURN EMBED (X 2 MIRRORED)

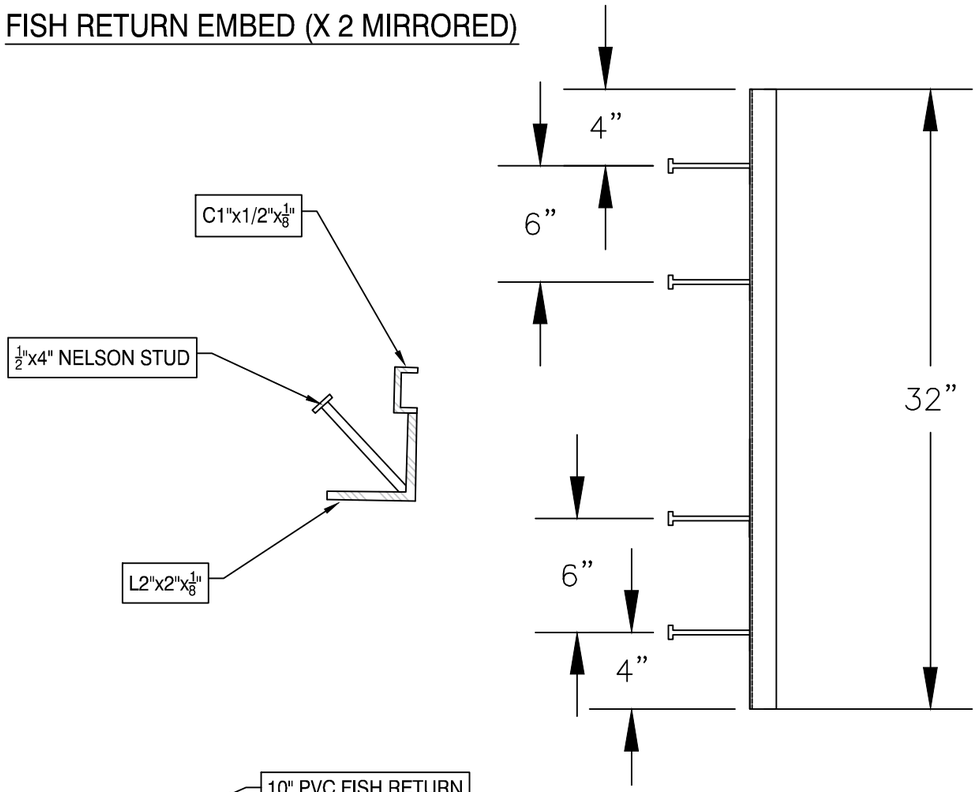

SCREEN CRADLE EMBED (X 2)

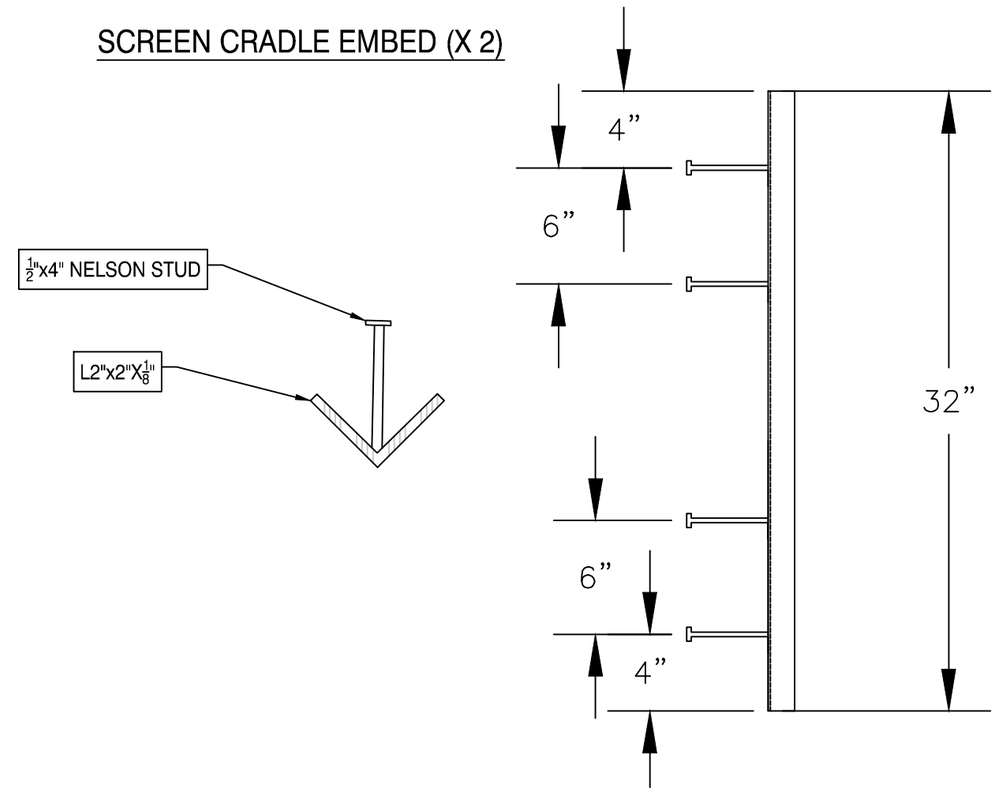

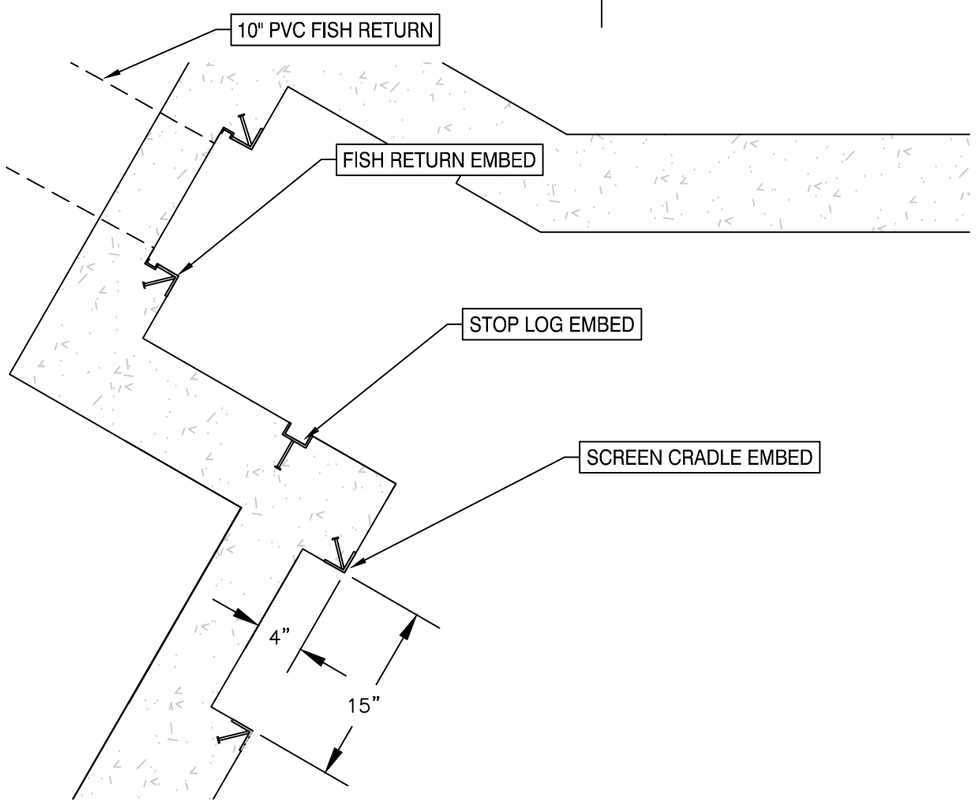

STOP LOG EMBED (X 6)

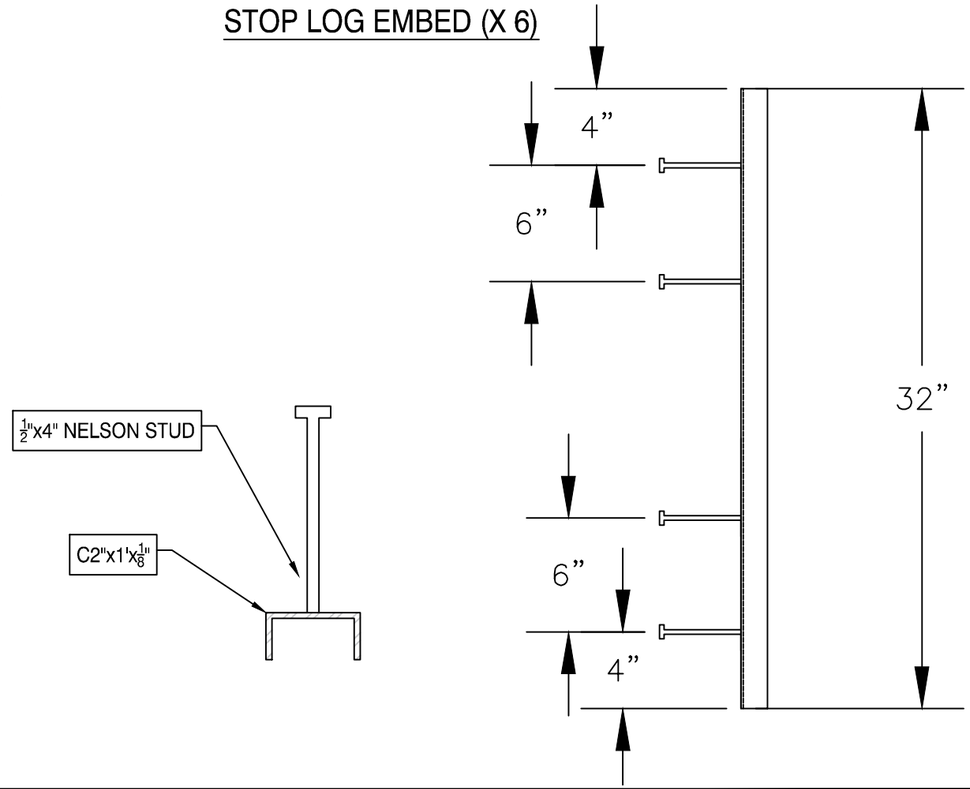

DRAWING STATUS:	DATE:	No.	REVISION:	DATE:
60%	05/16/23	△		
90%	08/16/23	△		
		△		
		△		
		△		
		△		
		△		

RSI Resource Specialists INC.
20340 EMPIRE AVE. STE. E-8
BEND, OR 97703
(541)771-6911
gabe@rsiengr.com

PROJECT:
WALLA WALLA FORKS
FISH SCREEN
PROJECT LOCATION:
UMATILLA COUNTY, OREGON
CLIENT:
GEOENGINEERS INC.

DRAWN BY: BDD

SHEET TITLE:
EMBED DETAILS

DRAWING:
FFS - 1.11

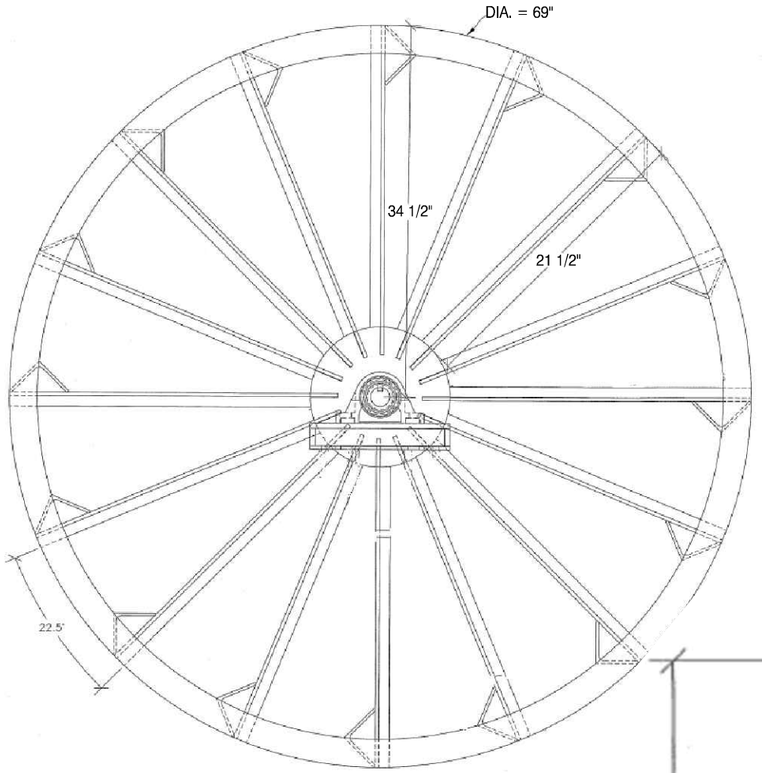

REGISTERED PROFESSIONAL ENGINEER
72665PE
PRELIMINARY
OREGON
MAY 10, 2016
GABRIEL M WILLIAMS
RENEWAL DATE: 6/30/24

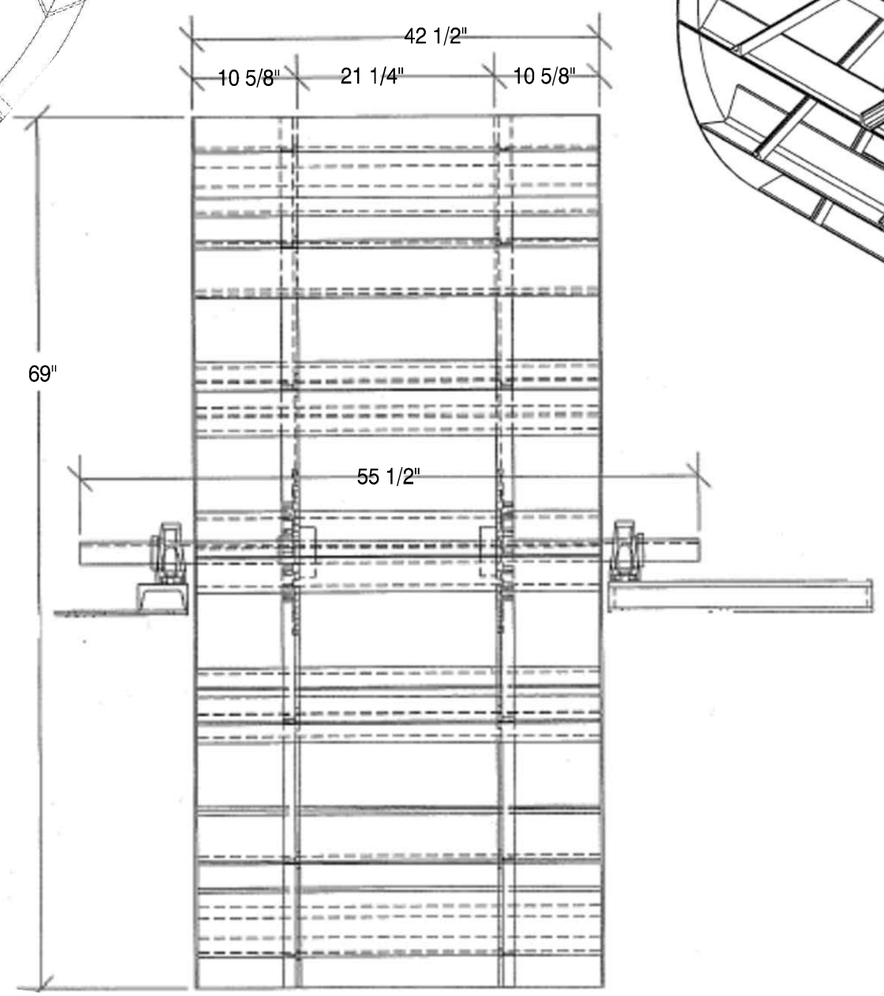

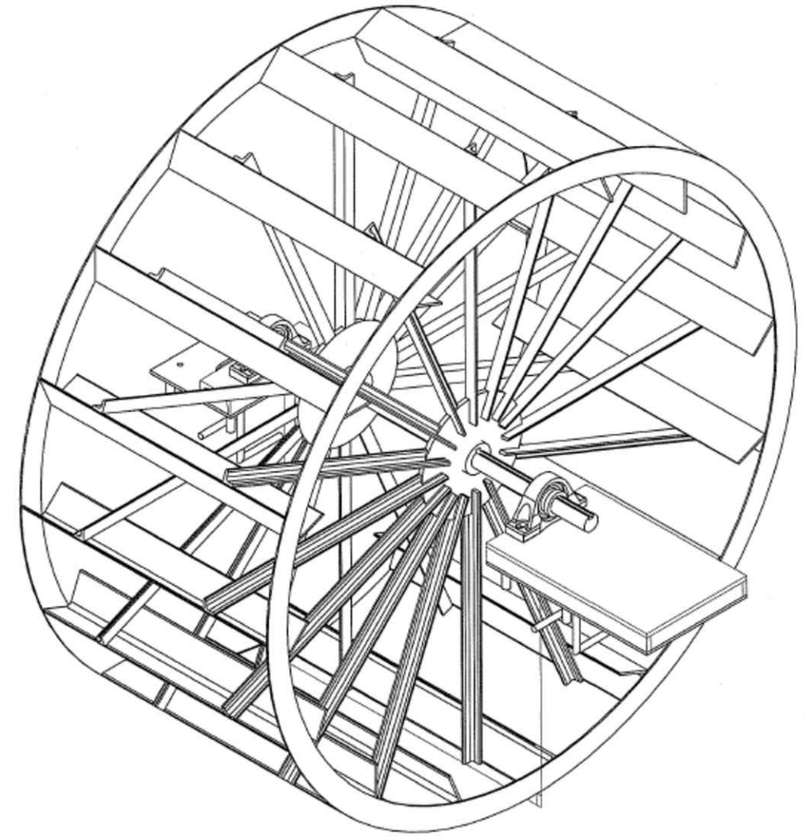

note: shaft size is 1 15/16" diameter

details from ODFW screen design

DRAWING STATUS:	DATE:	No.	REVISION:	DATE:
60%	05/16/23	△		
90%	08/16/23	△		
		△		
		△		
		△		
		△		
		△		

RSI Resource Specialists INC.
20340 EMPIRE AVE. STE. E-8
BEND, OR 97703
(541)771-6911
gabe@rsiengr.com

PROJECT: WALLA WALLA FORKS FISH SCREEN
PROJECT LOCATION: UMATILLA COUNTY, OREGON
CLIENT: GEOENGINEERS INC.

DRAWN BY: BDD
SHEET TITLE: PADDLEWHEEL DETAILS
DRAWING: FFS - 1.12

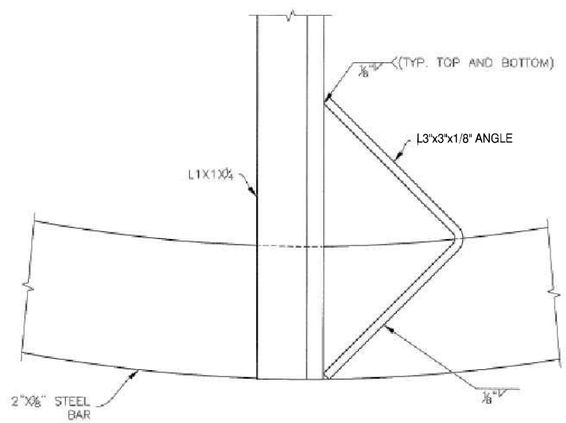

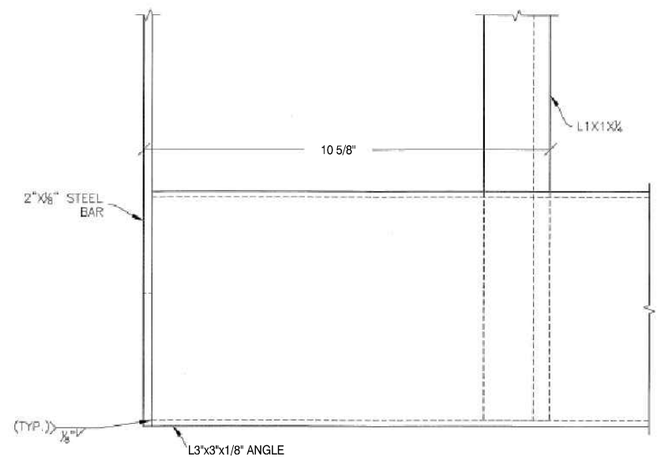

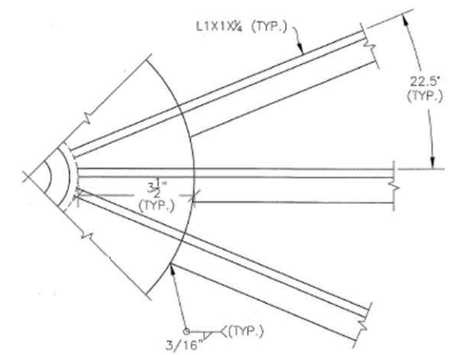

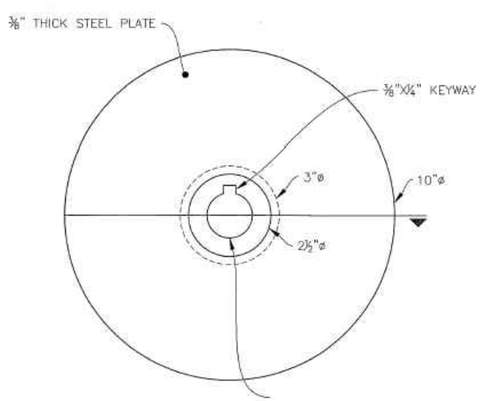

note: shaft size is 1 15/16" diameter

WATER WHEEL DRIVE COMPONENTS

WATER WHEEL GEAR BOX*					
	BRAND	ASSEMBLY#	MODEL#	STYLE	RATIO
LEFT HAND	HUB CITY	0220-77685	261	B	10:1
RIGHT HAND	HUB CITY	0220-77675	261	C	10:1
JAW COUPLING*					
	BRAND	CATALOG#	MODEL#	STYLE	SHAFT ø
⅝"ø SHAFT	MARTIN*	ML-099	ML-099-⅝"	ML	⅝"
1⅜"ø SHAFT	MARTIN*	ML-099	ML-099-1⅜"	ML	1⅜"
BRONZE INSERT	LOVEJOY				
DRIVE SHAFT COMPONENTS*					
	BRAND	PART#	TYPE	SERIES	LUBE FITTING
U-JOINT	NEAPCO*	1-0170	ROUND-ISR		CROSS
YOKE 1" SQUR	NEAPCO*	10-0452	SQUARE	1000	
YOKE 1⅜" RND	NEAPCO*	10-4293	ROUND	1000	
YOKE 1" RND	NEAPCO*	10-4573	ROUND	1000	
YOKE ¼" RND	NEAPCO*	10-5156	RND	1000	
DRIVE SHAFT*					
DRIVE LINE TUBEING		1PC. 1" OR 1PC. 1⅜"			
DRIVE LINE SQUARE STOCK		1PC. 1"X6" SCREEN, 1PC. 1"X2" P.W.			
DRIVE LINE SQUARE TUBING		1PC. 1"X6" SCREEN			
WATER WHEEL CENTER HUB*					
	BRAND	PART#	STD KW.		
1⅜"ø SHAFT	G&G MFG. CO.	000500225	9/16"		
1 15/16"ø SHAFT	G&G MFG. CO.	00050031	½"		
*INSTALL LISTED PARTS OR EQUAL					

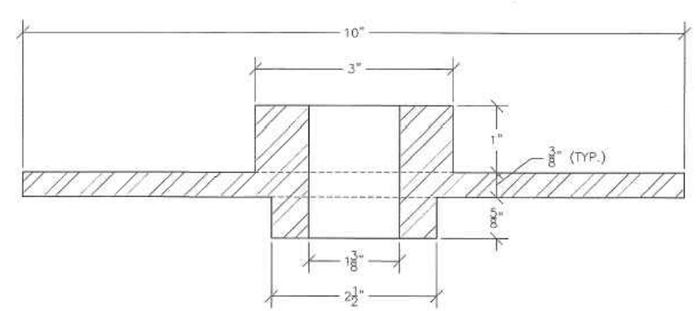

REGISTERED PROFESSIONAL ENGINEER
72665PE
PRELIMINARY
OREGON
MAY 10, 2016
GABRIEL M WILLIAMS
RENEWAL DATE: 6/30/24

details from ODFW screen design

DRAWING STATUS:	DATE:	No.	REVISION:	DATE:
60%	05/16/23	△		
90%	08/16/23	△		
		△		
		△		
		△		
		△		
		△		

RSI Resource Specialists INC.
20340 EMPIRE AVE. STE. E-8
BEND, OR 97703
(541)771-6911
gabe@rsiengr.com

PROJECT: WALLA WALLA FORKS FISH SCREEN
PROJECT LOCATION: UMATILLA COUNTY, OREGON
CLIENT: GEOENGINEERS INC.

DRAWN BY: BDD
SHEET TITLE: PADDLEWHEEL DETAILS
DRAWING: FFS - 1.13

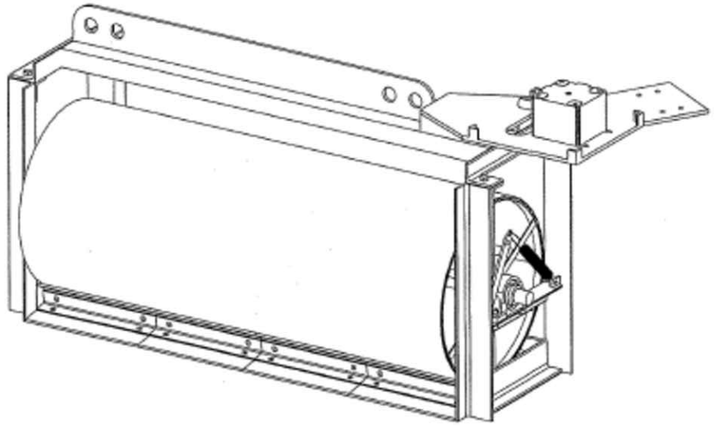

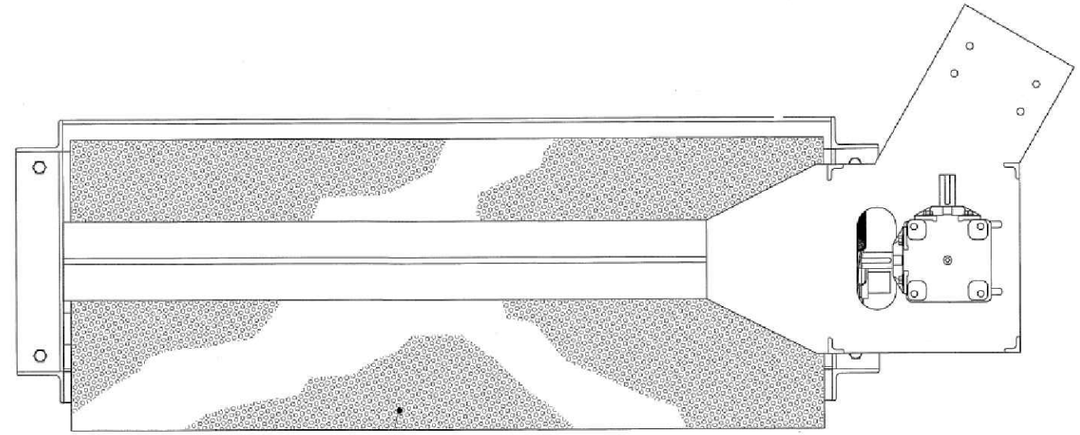

SCREEN DRIVE COMPONENTS

SCREEN GEARBOX*					
	BRAND	ASSEMBLY#	MODEL#	STYLE	RATIO
LEFT HAND	HUB CITY	0220-00805	150	C,F	1:1
RIGHT HAND	HUB CITY	0220-00803	150	D,E	1:1
SCREEN SPROCKET*					
	BRAND	CATALOG#	MODEL#	STYLE	KEYWAY DIM
1 3/8" SHAFT(1)	MARTIN	80B17SS/80B18SS	NO.80 1"PITCH	B	5/16"
1 15/16" SHAFT(1)	MARTIN	80B17SS/80B20SS	NO.80 1"PITCH	B	1/2"
GEAR BOX	MARTIN	80B13TSS	NO.80 1" PITCH	B	1/4"
SCREEN CHAIN					
	BRAND	ASEM/ANSI#	MODEL#	STYLE	DIM
DRIVE CHAIN	DIAMOND	80SS	N/A	RIVETED ROLLER	1"X5/8"
BEARING PILLOW BLOCKS*					
	BRAND	UNIT TYPE	BEARING NUMBER	COLLAR NUMBER	HOUSING NUMBER
1 3/8"PILLOW BLOCK	FAFNIR	VAS STANDARD	GRA104RRB	S1104K	T-40242
1 15/16"PILLOW BLOCK	FAFNIR	VAS STANDARD	GRA115RRB	S1115K	T-40245

* INSTALL LISTED PARTS OR EQUAL
(1) SHAFT TYPE ESTABLISHED BY SHOP DISCRETION

REGISTERED PROFESSIONAL ENGINEER
72665PE
PRELIMINARY
OREGON
MAY 10, 2016
GABRIEL M WILLIAMS
RENEWAL DATE: 6/30/24

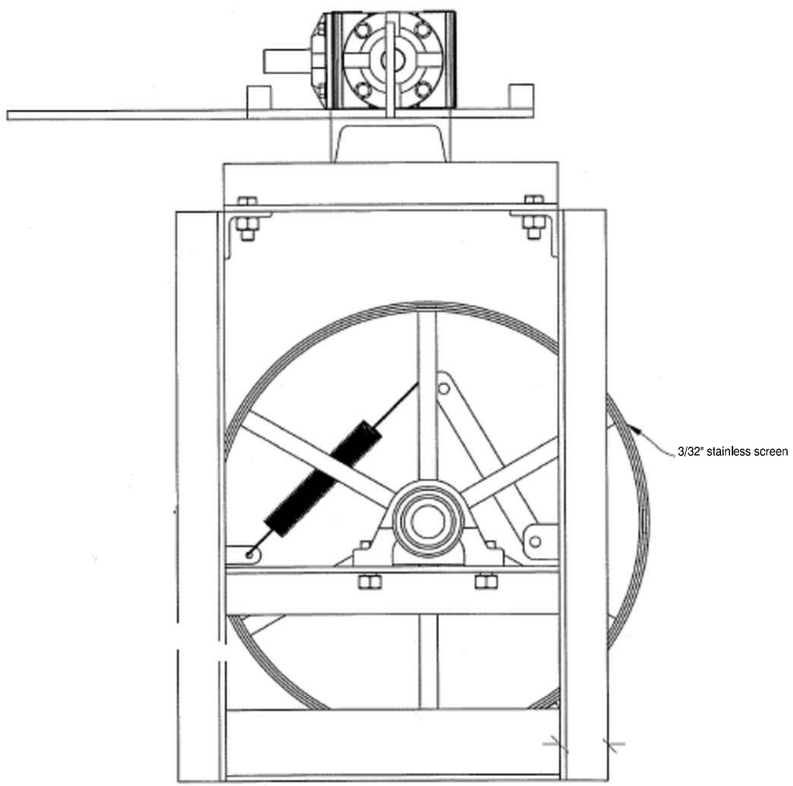

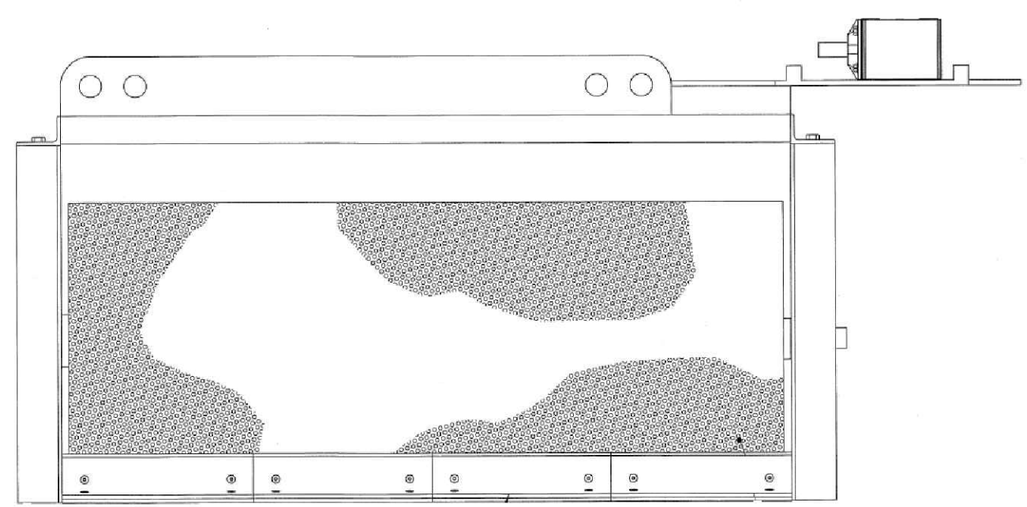

details from ODFW screen design

DRAWING STATUS:	DATE:	No.	REVISION:	DATE:
60%	05/16/23	△		
90%	08/16/23	△		
		△		
		△		
		△		
		△		
		△		

RSI Resource Specialists INC.
20340 EMPIRE AVE. STE. E-8
BEND, OR 97703
(541)771-6911
gabe@rsiengr.com

PROJECT:
WALLA WALLA FORKS
FISH SCREEN
PROJECT LOCATION:
UMATILLA COUNTY, OREGON
CLIENT:
GEOENGINEERS INC.

DRAWN BY: BDD
SHEET TITLE:
SCREEN DETAILS

DRAWING:
FFS - 1.14

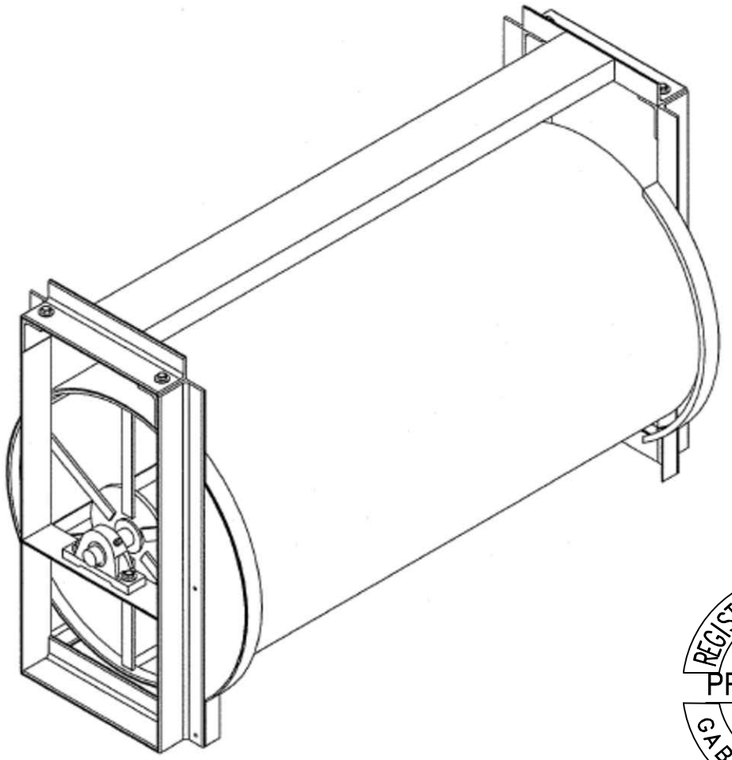

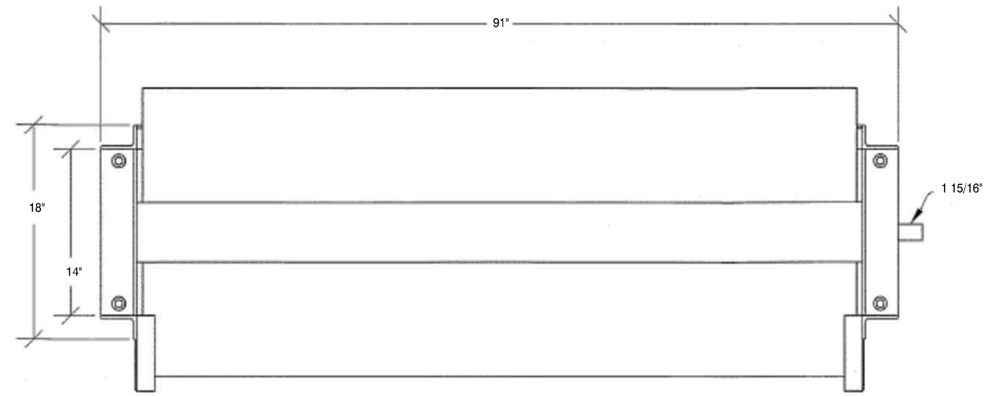

REGISTERED PROFESSIONAL ENGINEER
72665PE
PRELIMINARY
OREGON
MAY 10, 2016
GABRIEL M WILLIAMS
RENEWAL DATE: 6/30/24

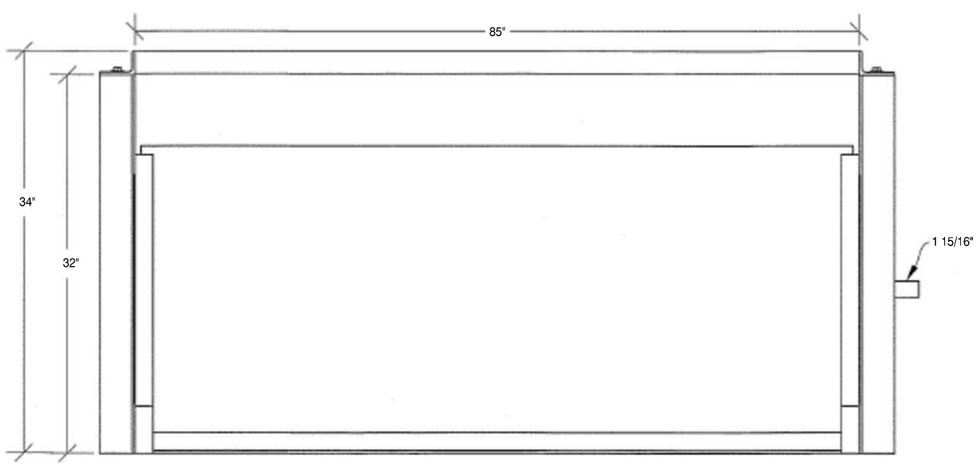

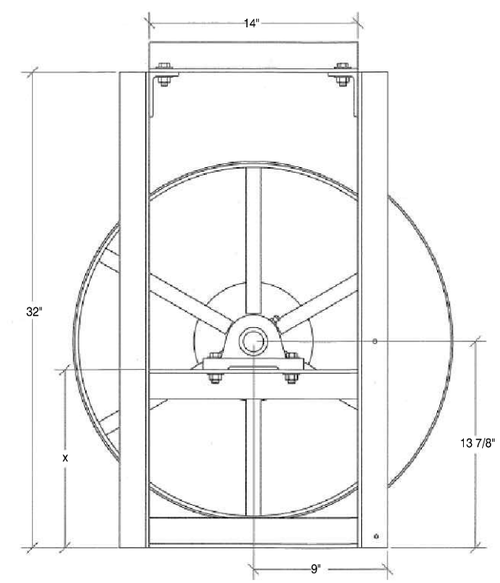

note: verify dimension x during assembly

details from ODFW screen design

DRAWING STATUS:	DATE:	No.	REVISION:	DATE:
60%	05/16/23	△		
90%	08/16/23	△		
		△		
		△		
		△		
		△		
		△		

RSI Resource Specialists INC.
20340 EMPIRE AVE. STE. E-8
BEND, OR 97703
(541)771-6911
gabe@rsiengr.com

PROJECT:
WALLA WALLA FORKS
FISH SCREEN
PROJECT LOCATION:
UMATILLA COUNTY, OREGON
CLIENT:
GEOENGINEERS INC.

DRAWN BY: BDD
SHEET TITLE:
SCREEN DETAILS

DRAWING:
FFS - 1.15

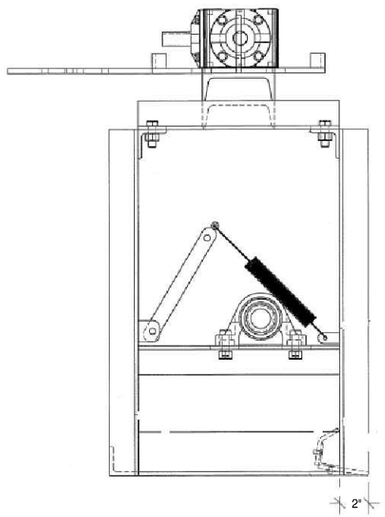

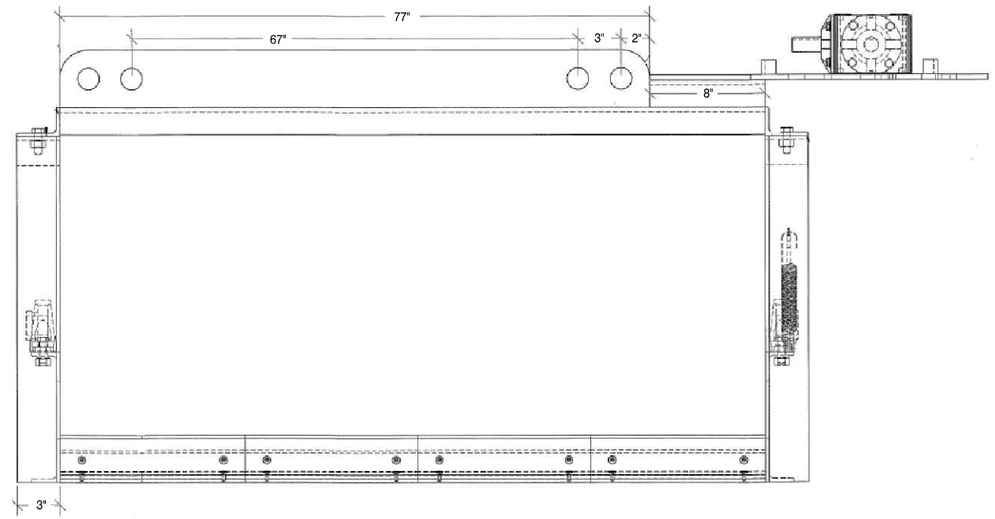

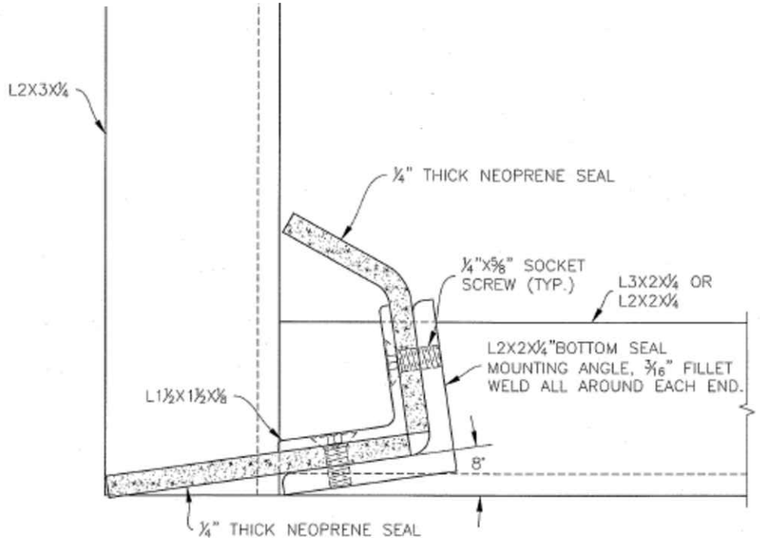

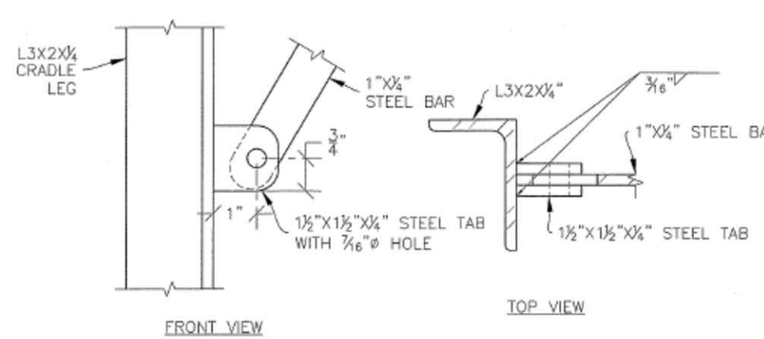

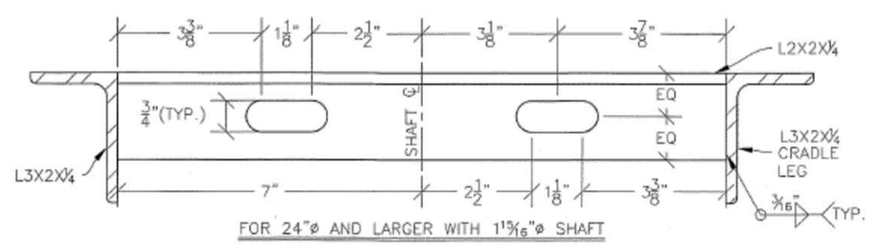

REGISTERED PROFESSIONAL ENGINEER
72665PE
PRELIMINARY
OREGON
MAY 10, 2016
GABRIEL M WILLIAMS
RENEWAL DATE: 6/30/24

details from ODFW screen design

DRAWING STATUS:	DATE:	No.	REVISION:	DATE:
60%	05/16/23	△		
90%	08/16/23	△		
		△		
		△		
		△		
		△		
		△		

RSI Resource Specialists INC.
20340 EMPIRE AVE. STE. E-8
BEND, OR 97703
(541)771-6911
gabe@rsiengr.com

PROJECT: WALLA WALLA FORKS FISH SCREEN
PROJECT LOCATION: UMATILLA COUNTY, OREGON
CLIENT: GEOENGINEERS INC.

DRAWN BY: BDD
SHEET TITLE: SCREEN DETAILS

DRAWING: FFS - 1.16

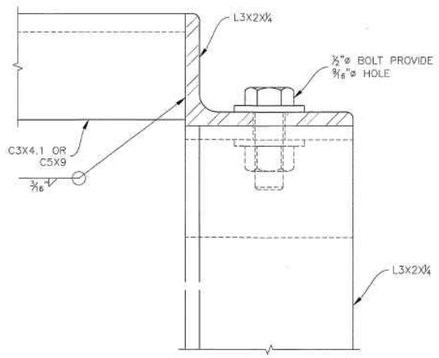

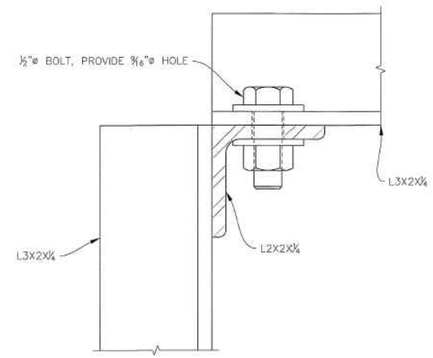

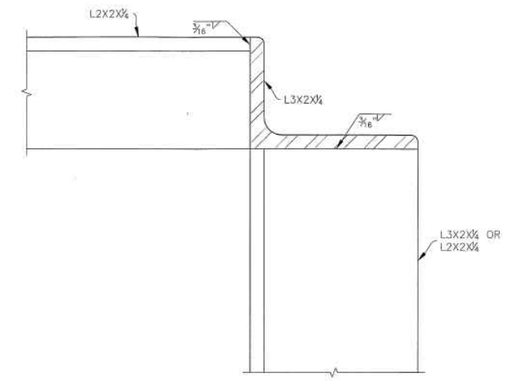

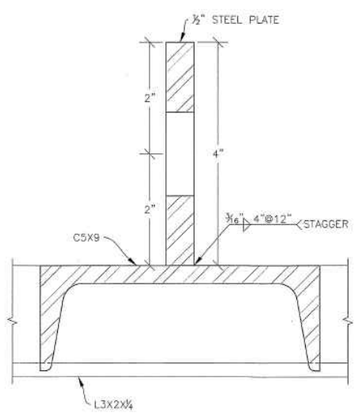

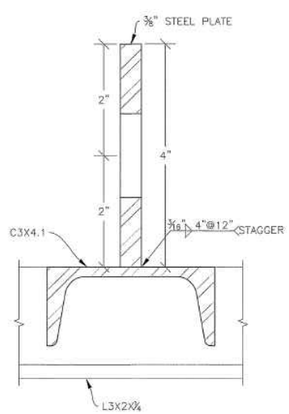

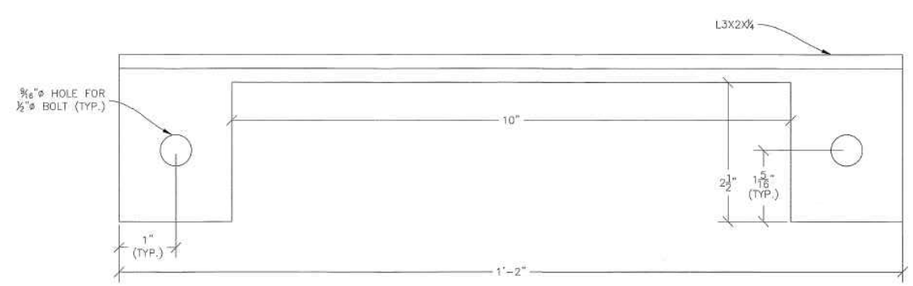

REGISTERED PROFESSIONAL ENGINEER
72665PE
PRELIMINARY
OREGON
MAY 10, 2016
GABRIEL M WILLIAMS
RENEWAL DATE: 6/30/24

details from ODFW screen design

DRAWING STATUS:	DATE:	No.	REVISION:	DATE:
60%	05/16/23	△		
90%	08/16/23	△		
		△		
		△		
		△		
		△		
		△		

RSI Resource Specialists INC.
20340 EMPIRE AVE. STE. E-8
BEND, OR 97703
(541)771-6911
gabe@rsiengr.com

PROJECT:
WALLA WALLA FORKS
FISH SCREEN
PROJECT LOCATION:
UMATILLA COUNTY, OREGON
CLIENT:
GEOENGINEERS INC.

DRAWN BY: BDD
SHEET TITLE:
SCREEN DETAILS

DRAWING:
FFS - 1.17

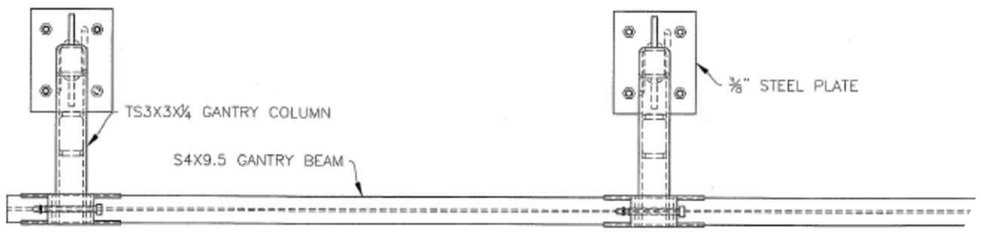

note: anchors to be 5/8" L = 6" minimum.

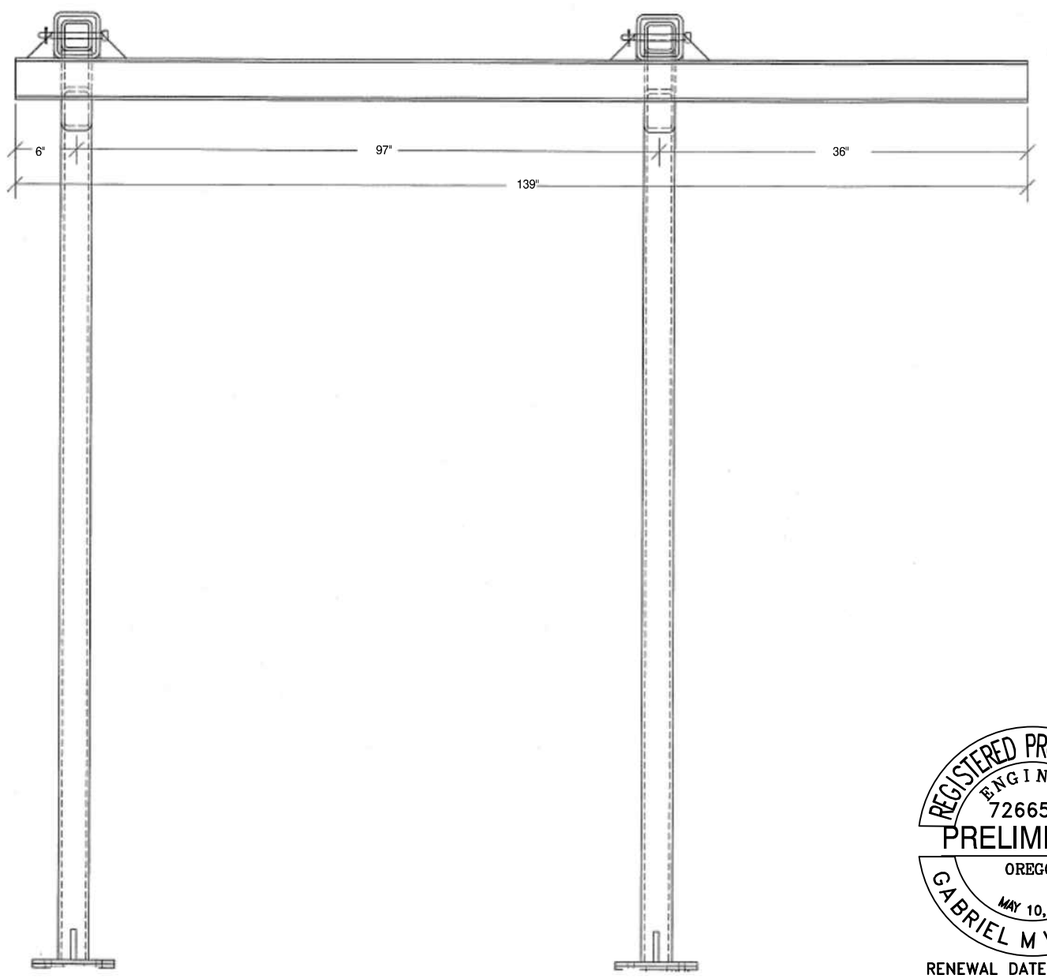

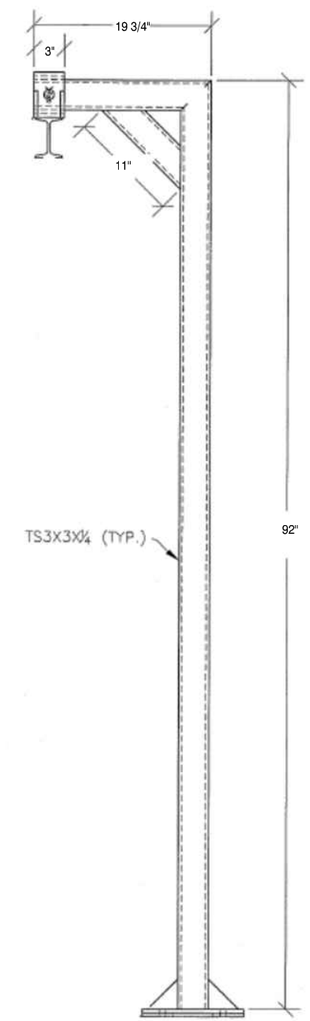

REGISTERED PROFESSIONAL ENGINEER
72665PE
PRELIMINARY
OREGON
MAY 10, 2016
GABRIEL M WILLIAMS
RENEWAL DATE: 6/30/24

details from ODFW screen design

DRAWING STATUS:	DATE:	No.	REVISION:	DATE:
60%	05/16/23	△		
90%	08/16/23	△		
		△		
		△		
		△		
		△		
		△		

RSI Resource Specialists INC.
20340 EMPIRE AVE. STE. E-8
BEND, OR 97703
(541)771-6911
gabe@rsiengr.com

PROJECT: WALLA WALLA FORKS FISH SCREEN
PROJECT LOCATION: UMATILLA COUNTY, OREGON
CLIENT: GEOENGINEERS INC.

DRAWN BY: BDD
SHEET TITLE: GANTRY DETAILS
DRAWING: FFS - 1.18